NEOVOLTA

Date: November 6th 2025

Clarification of inter row spacing and mounting heights.

This letter clarifies that the minimum installation distance between NVPlus-10.2 batteries may be reduced from 36 inches to 11.8 inches (300 mm), in accordance with the findings from the UL 9540A Fire Test Report CN258DV6 001, issued by TÜV Rheinland.

Attachment A: Diagrams of setup for unit level testing

Diagrams of setup for unit level testing

Figure 5. Test site setup diagram with separation distance. (Top view)

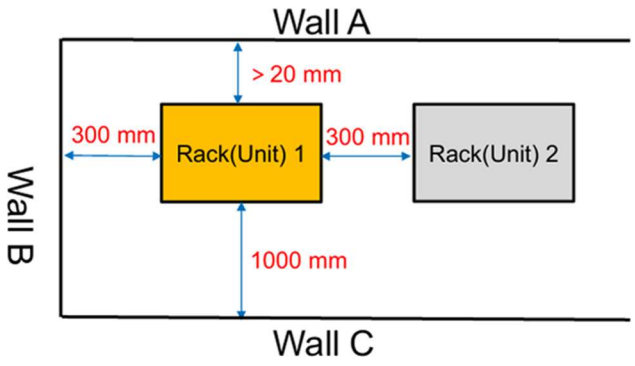

NEOVOLTA

This letter confirms that there are no specified minimum or maximum mounting heights for the NVPlus-10.2 battery. However, as stated in the NVPlus-10.2 installation manual, the following requirements and guidelines must be observed when mounting the batteries:

5.2 Installation Location

Make sure that the installation location meets the following conditions:

- The wall is structurally sufficient, flat, and level.
- There are no flammable or explosive materials.
- The ambient temperature is within the range from -20C to 50C (-4F to 122F)
- The temperature and humidity are maintained at a constant level.
- There are minimal dust and dirt in the area.
- Keep 2 meters (6.5 ft) distance from any possible heat source.
- The distance from the air outlet of the inverter is more than 0.5 meters (1.6ft).
- Provide adequate ground clearance when floor and wall-mounted to prevent contact with dirt, vegetation or standing/running water.
- Do not cover or wrap the battery enclosure under any circumstances.
- While no mandatory ventilation is required for battery modules, avoid installing them in confined spaces. Ensure proper aeration and avoid environments with high salinity, humidity, or extreme temperature.

Reference:

- NVPlus-10.2 UL 9540A Test Report CN258DV6 001
- NVPlus-10.2 Installation Manual section 5.2

Best regards,



Patrick Honegger
Director of Product Management
NeoVolta Inc.

NEOVOLTA

5. Mounting instructions

5.1 Installation Precaution

Lithium battery is designed for outdoor use (IP65).

Please make sure the installation site meets the conditions below:

- ◆ Not in areas where the ambient temperature can exceed -20°C to 50°C (-4F to 122F).
- ◆ Not in areas where highly flammable materials are stored.
- ◆ Not in potentially explosive areas.
- ◆ Not higher than an altitude of about 2000 meters above sea level.
- ◆ Not in environment of precipitation or humidity (>95%).

5.2 Installation Location

Make sure that the installation location meets the following conditions:

- ✧ The wall is structurally sufficient, flat, and level.
- ✧ There are no flammable or explosive materials.
- ✧ The ambient temperature is within the range from -20°C to 50°C. (-4F to 122F)
- ✧ The temperature and humidity are maintained at a constant level.
- ✧ There are minimal dust and dirt in the area.
- ✧ Keep 2 meters (6.5 ft) distance from any possible heat source.
- ✧ The distance from the air outlet of the inverter is more than 0.5 meters (1.6ft).
- ✧ Provide adequate ground clearance when floor and wall-mounted to prevent contact with dirt, vegetation or standing/running water.
- ✧ Do not cover or wrap the battery enclosure under any circumstances.
- ✧ While no mandatory ventilation is required for battery modules, avoid installing them in confined spaces. Ensure proper aeration and avoid environments with high salinity, humidity, or extreme temperature.

CAUTION

If the ambient temperature falls outside the specified operating range, the battery will automatically limit its charge and discharge power, which may reduce the inverters output power. To protect itself, the battery may also temporarily suspend operation until the ambient temperature returns to -20°C to 50°C (-4°F to 122°F). During such a situation there can be the possibility that the LED will initiate a RED LED alarm light.

The optimal operating temperature range for the battery pack is 15°C to 35°C (59°F to 95°F). Prolonged exposure to extreme temperatures can accelerate performance degradation and shorten the overall service life of the battery pack.

According to the NV Plus UL 9540A Fire Test, the distance between the battery packs can be reduced to 11.8in. Please consult your AHJ prior to installation.

Remember that this battery is heavy! Please be careful when lifting out of the package.