NEOVOLTA

All-In-One Modular ESS

NV Wave

Patented Modular Click-in Design



INSTALLATION MANUAL

For support scan here

800.364.5464

NEOVOLTA.COM

V4_10052026

Declaration

NeoVolta (hereinafter referred to as "NeoVolta") reserves the right to modify the frame dimensions, functionality, technical data, parameters, and/or standards without prior notice.

The contents of this manual have been checked in accordance with its described hardware and software. **However, the contents of this manual may be subject to appropriate modification because of a product upgrade, specification change, or other update of the manual; we cannot guarantee full accordance all the time.** The data in this manual is reviewed regularly, and any necessary corrections are included in subsequent editions. Suggestions for improvement from readers are appreciated. The latest version of this manual can be found at www.neovolta.com.

No part of this manual may be reproduced in any form, or by any means, without prior written permission of NeoVolta.

Other Rights

NeoVolta and other NeoVolta trademarks used in this manual are owned by NeoVolta Inc. Using data contained in firmware or software developed by NeoVolta Inc, in part or in full, for commercial purposes by any means, is prohibited. Reverse engineering, cracking, or any other operation that destroys the original programming design of software developed by NeoVolta Inc. is prohibited.

Important Notes:

- Please ensure the security of the product enclosure and all safety covers before installation. Operations must conform to the requirements of this manual and local industrial safety regulations and/or electrical codes.
- Installation shall comply with the current version of the IFC, IRC, IBC, NEC or your state's equivalent codes.
- In the event of damage or loss of user manual, users can download a new copy online at www.neovolta.com.
- Contents of this manual may be subject to appropriate modification as a result of product upgrade(s), specification change, and update(s) to this manual.
- If any item as stated in this manual is not clear, please contact our technical support department. 800.364.5464
- If any anomaly occurs after powering up or during the operation, it is essential to stop the ESS and identify the issue, or to seek technical support as soon as possible.

Technical Support

- Before installation, wiring, operation, and repair to the ESS and its components, please read and strictly comply with all the safety precautions in this manual.
- Please ensure all the warning marks on the NV Wave system and its components are clear and distinct.
- If you have any questions, or if anything is not clear about this product and its operation, contact us at **800.364.5464.**



Table of Contents

Declaration	2
Other Rights	2
Important Notes	2
Technical Support	3
1. Safety Information	6
1.1 Symbols Used	6
1.2 Important Safety Instructions	6
1.3 Battery Safety Instructions	8
1.4 Important Battery Safety Notes	8
2. Product Description	9
2.1 System Configurations	9
2.2 Cabinet Dimensions	10
2.3 Component Overview	11
2.4 Component Shipments (Unboxing)	13
3. Tools and Materials	14
4. Parts List	15
5. Installation Requirements	16
5.1 Overview	16
5.2 Site Location	17
5.3 Clearance Requirements	18
6. NV Wave Main Unit Installation	19
6.1 Mounting the NV Wave Main Unit Enclosure	19
6.1.1 NV Wave Wall Mounting Notes	21
6.2 AC Distribution Blocks	22
6.3 AController	23
6.4 (Optional) Main AC Breaker Installation	27
6.5 E-Stop and EPO Switch Installation	30
6.6 Grid Main and Load Connections	31

Table of Contents Continued

6.7 Auto Transformer	32
6.8 Inverter Box Components	34
6.9 Temperature Sensor	39
6.10 Inverters	40
6.11 Wi-Fi Antenna	42
6.12 TPR Interconnection	43
6.13 Function Button Installation	44
6.14 LED Connection	44
6.15 Battery Installation	45
6.16 Front Cover Installation	46
6.17 NV Wave Name Plate Installation	47
6.18 System Output Options	48
6.19 Expansion Enclosure(s)	52
7. Whole-Home Back-up	54
7.1 Wiring Whole-Home Backup Configuration	54
7.2 Load Management of Backup Load Circuits	55
8. Grounding and Bonding	56
9. System Settings	58
9.1 System Commissioning	58
9.2 Applying Power	60
9.3 NV Connect	61
9.4 How the Homeowner Monitors Their System via NV Connect	68
9.5 LED Indication States	69
9.6 LED Indication Patterns	69

1. Safety Information

The following types of safety instructions and general information appear in this document as described below:

1.1 Symbols Used

	**"Danger"** indicates a hazardous situation which, if not avoided, will result in death or serious injury.
	**"Warning"** indicates a hazardous situation which, if not avoided, could result in death or serious injury.
	**"Caution"** indicates a hazardous situation which, if not avoided, could result in minor or moderate injury.
	**"Note"** provides tips that are valuable for the optimal operation of our equipment.

1.2 Important Safety Instructions

- Store this manual securely. When operating equipment, in addition to following the general precautions in this manual, follow the specific safety instructions closely. NeoVolta will not be liable for any consequences caused by violation of the safety operation regulations and design, production, and usage standards outlined herein.
- Unless otherwise specified, only accessories shipped with the ESS are recommended for use to reduce risk of fire, electric shock, or personal injury.
- Make sure the existing wiring is in good condition; wires should not be undersized.
- Do not disassemble any parts of the ESS. It contains no user-serviceable parts. See warranty for instructions on obtaining service.
- Attempting to service the ESS yourself may result in risk of electric shock or fire and will void your warranty.
- Keep away from flammable, explosive materials to avoid fire disasters.
- The installation location should be free from humidity or corrosive substances.
- Authorized service personnel must use insulated tools when installing or working on NV Wave equipment.
- CAUTION – RISK OF ARCING. Never remove a battery module or inverter module while the NV Wave is turned on and operating. Turn the NV Wave completely off including Mains and AC-Coupled solar system before working on the components.



DANGER — LETHAL VOLTAGE PRESENT AFTER SHUTDOWN
The NV Wave inverter modules contain capacitors that retain charge at potentially lethal DC voltage levels even after the MAINS, battery, and AC-PV inputs have been disconnected.

DO NOT open the inverter box or touch internal inverter connections until a minimum of 5 MINUTES has elapsed after full disconnection from all power sources.

Use a calibrated multimeter rated for ≥1100 VDC to verify voltage has fully dissipated before performing any work on inverter components.



CAUTION-RISK OF ELECTRIC SHOCK.
Prior to removing the NV Wave cover and working on internal components or wire connections, be sure to turn off the NV Wave and completely disconnect the unit from the Grid Supply and AC-Coupled solar system. Wait 5 min for the internal capacitors inside the inverter modules to discharge.

- Lightning can cause damage from direct or nearby strike.
- Induced surges are most likely due to lightning damage in the majority of installations, especially in rural areas where electricity is usually provided by long overhead lines. Surges may be included on both the PV array conduction and the AC cables leading to the building.
- Specialists in lightning protection should be consulted during end use application. Using appropriate external lightning protection, the effect of a direct lightning strike into a building can be mitigated in a controlled way, and the lightning current can be discharged into the ground.
- Installation of SPDs to protect the inverter against mechanical damage and excessive stress include a surge arrester in case of a building with an external lightning protection system (LPS) when separation distance is kept.
- Anti-Islanding Effect is a special phenomenon where a grid-connected PV system will still supply power to the nearby grid when the voltage loss has happened in the power system. It is dangerous for maintenance personnel and the public. Hybrid series inverters provide active frequency drift (AFD) to prevent the islanding effect.

1.3 Battery Safety Instructions

Batteries may pose potential electric shock and short-circuit current danger, to avoid these risks, the following warnings should be observed during battery handling and replacement:

1. Turn off the NV Wave by pressing the Function Button for 10 seconds and disconnect all AC power sources to the unit.



WARNING — DC BUS REMAINS LIVE AFTER SHUTDOWN
Turning off the NV Wave using the Function Button or disconnecting AC grid power does NOT de-energize the DC Bus or Transfer Power Rail (TPR). The battery modules continue to supply voltage to the TPR at all times while connected.

Before performing any work on battery modules, the TPR, or DC wiring:

- Press and hold the Function Button for 10 seconds to power down the system.
- Disconnect AC grid power at the upstream breaker.
- Do not rely on the system being "off" as confirmation that the DC bus is safe.
- Use a calibrated multimeter to verify DC voltage at the TPR before touching any DC connections.
- Wear appropriate PPE: insulated gloves rated for the DC voltage present.

---

2. Do not wear watches, rings or other metallic jewelry.
3. Use proper personal protective equipment (PPE).
4. Do not place metallic tools or parts on the batteries.
5. Only NeoVolta certified personnel can carry out maintenance.

1.4 Important Battery Safety Notes

- Battery modules are shipped in a “sleep” state, per the Battery Management System, meaning they hold no voltage at the battery module terminals.
- The battery module’s BMS will “wake up” at the initial battery discovery stage during the first boot sequence after installation.
- Batteries cannot be removed while the NV Wave is turned on and running.
- When the battery is disconnected from the TPR, the BMS will go into “sleep” mode.
- Additional battery modules may be added to an existing installation for up to 18 months after the initial installation date.

2. Product Description

The NV Wave is described as a Residential Microgrid-Ready Energy Storage System (ESS) from NeoVolta. This modular and configurable system is designed to manage the entire home energy ecosystem with easy expansion, allowing it to grow with the owner's needs.

The NV Wave acts as the system controller for all home power sources, integrating and coordinating the various components.

The NV Wave provides grid-forming capability and supports intentional islanding, giving homeowners backup power when utility grid power goes down. The scalable architecture of the NV Wave allows users to increase battery and inverter capacity without redesigning the system.

2.1 System Configurations

NV Wave configurations can include up to three enclosures:

FIRST ENCLOSURE (3.45 - 13.8 kWh)	SECOND ENCLOSURE (17.25 - 34.5 kWh)	THIRD ENCLOSURE (37.95 - 55.2 kWh)	ENCLOSURE COVER (ONE PER ENCLOSURE)
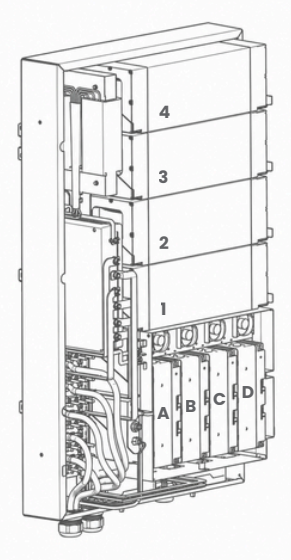	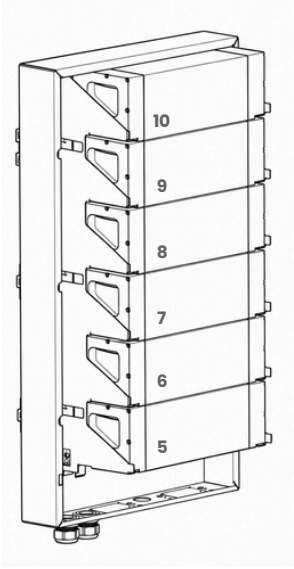	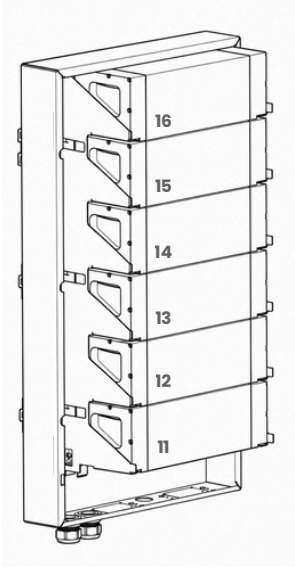	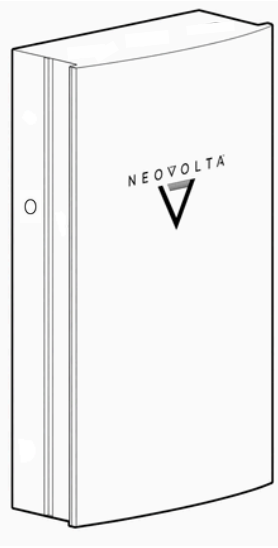
BATTERY STORAGE **1** 3.45 kWh **2** 6.9 kWh **3** 10.35 kWh **4** 13.8 kWh	**5** 17.25 kWh **6** 20.7 kWh **7** 24.15 kWh **8** 27.6 kWh **9** 31.5 kWh **10** 34.5 kWh	**11** 37.95 kWh **12** 41.4 kWh **13** 44.85 kWh **14** 48.3 kWh **15** 51.75 kWh **16** 55.2 kWh	**INVERTER POWER** **A** 2.4 kW **B** 4.8 kW **C** 7.2 kW **D** 9.6 kW

2.2 Cabinet Dimensions

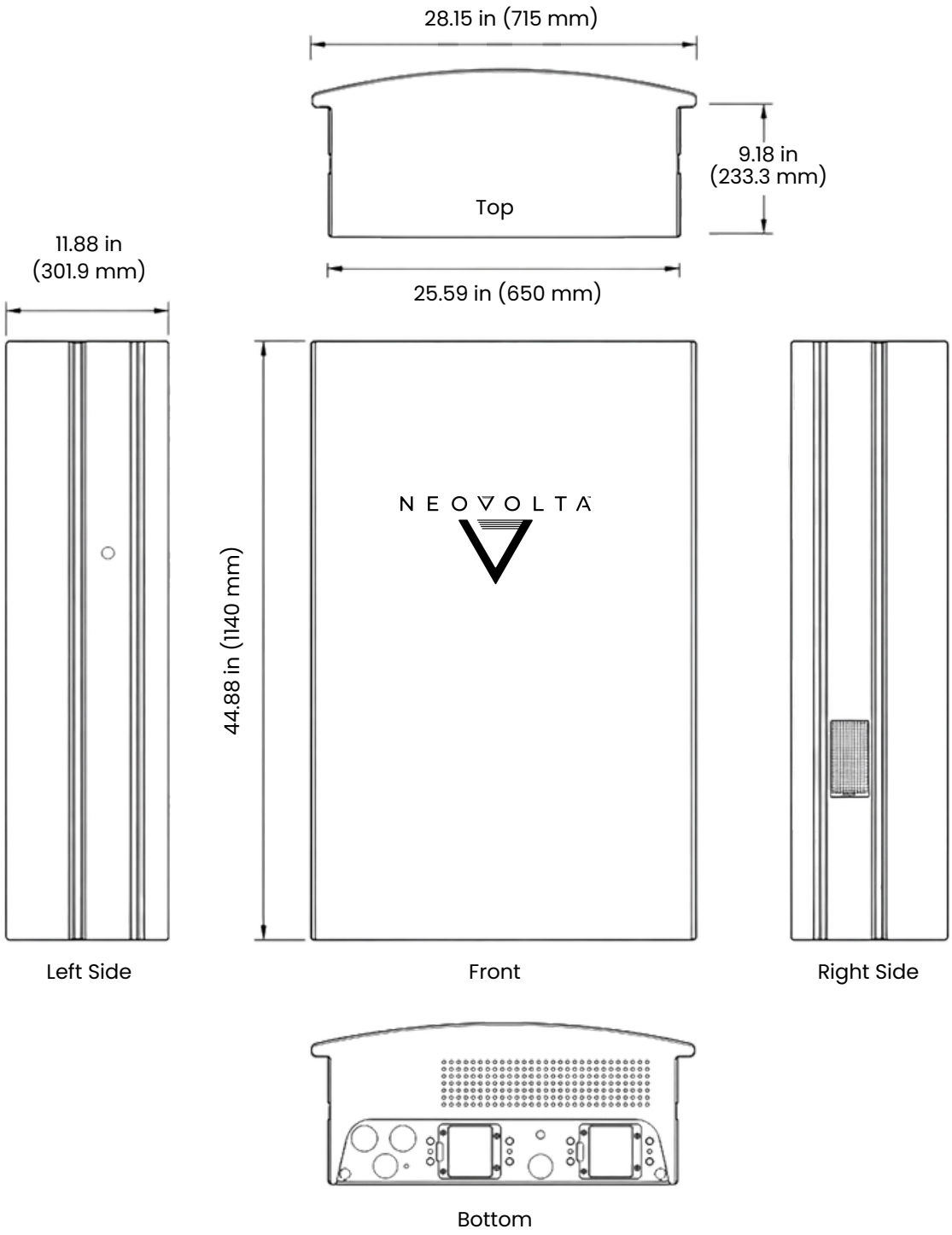

Note: The NV Wave first, second, and third enclosure all have the same dimensions.

2.3 Component Overview

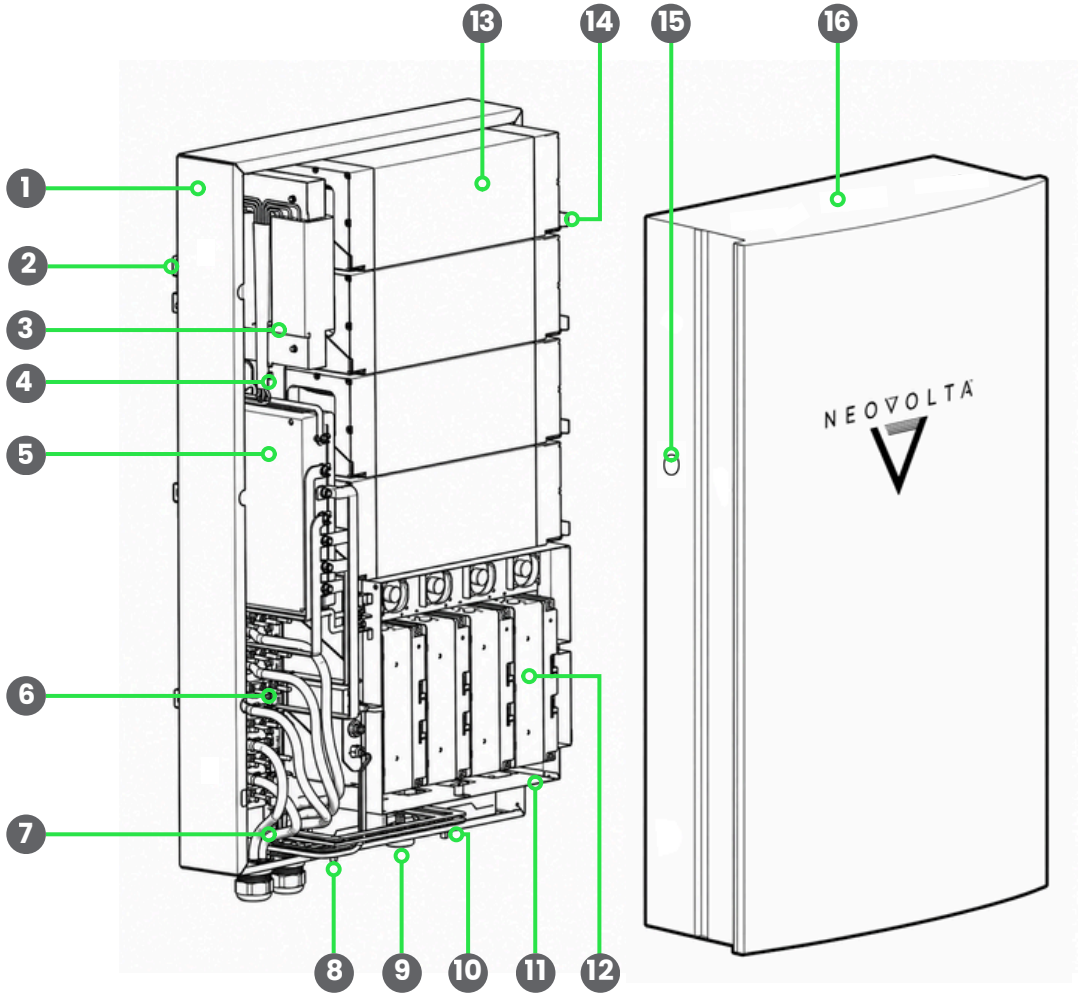

1 Enclosure Base
2 Wall Brackets
3 Auto Transformer
4 TPR (Transfer Power Rail)
5 AController
6 AC Power Distribution Blocks
7 AC Grid Connection and Load Connection
8 AC Grid Input Circuit Breaker
9 Wi-Fi Antenna
10 AC Bypass Circuit Breaker
11 Inverter Box
12 Inverter Module
13 Battery Modules
14 Enclosure Rack
15 Function Button
16 Enclosure Cover

2.4 Component Shipments (Unboxing)

The NV Wave's parts ship in six boxes.

The Auto Transformer is optional and not needed if there is no need for backup power.

Box 1: NV Wave Enclosure Set

Total weight = 38.92 kg (85.8 lbs)

1-A Enclosure base and cover
1-B TPR (pre-installed)
1-C AC Distribution Blocks (pre-installed)
1-D Wall Bracket
1-E LED Strips (pre-installed)

1-F Miscellaneous Parts
- 2x Breaker Cover
- IP65 Conduit Opening Fillers
- EPDM Plugs to seal mounting holes
- AC Breaker Mounting Screws

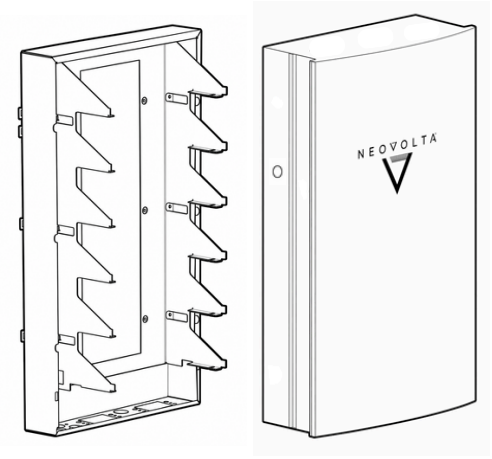

1-A: Enclosure Base and Cover



1-B: Transfer Power Rail (TPR)

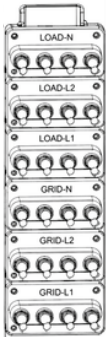

1-C: AC Distribution Blocks

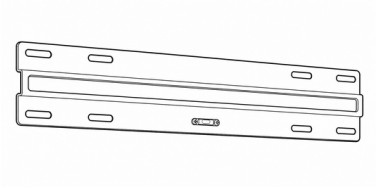

1-D: Wall Bracket

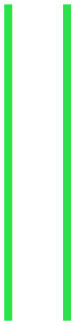

1-E: LED Strips



EPDM Plugs



Conduit Opening Fillers

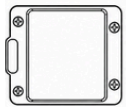

Breaker Covers

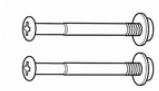

Breaker Mounting Screws

1-F: Misc Parts

Box 2: AController

Total weight = 9.2 kg, 20.8 lbs

2-A AController with E-stop Module
2-B NV Wave System Sticker and AController Sticker
2-C Function Button
2-D Installation Set (Wi-Fi Antenna, AC Busbar set, wire connection harnesses)

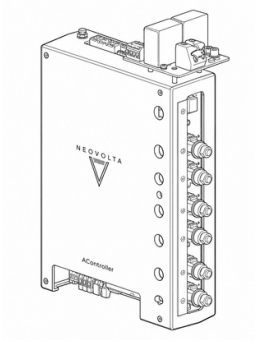

2-A AController with E-stop Module

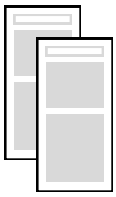

2-B NV Wave System Sticker and AController Sticker



2-C Function Button

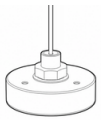

Wi-Fi Antenna



AC Busbar Set



Wire Connection Harnesses

2-D Installation Set

Box 3: Auto Transformer (optional)

Total weight = 17.1 kg, 37.69 lbs

Auto Transformer

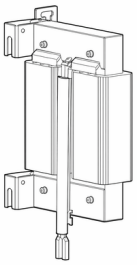

Box 4: Battery Module

Single Battery Module = 25 kg, 55 lbs
Total Battery Weight = 100 kg, 220 lbs

- One battery module per box

Battery Module

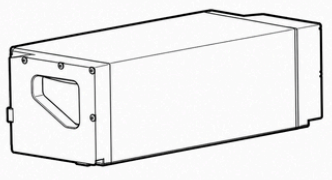

Box 5: Inverter Box

Total weight = 24.4 kg, 53.8 lbs

- Inverter Box Assembly
- Inverter handle
- AC Busbar

Inverter Box

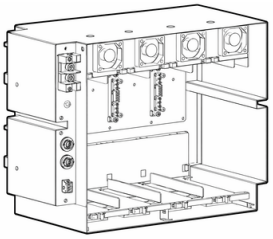

Box 6: Inverter Module

Single Inverter = 5.5 kg, 12 lbs
Total weight = 22 kg, 48 lbs

- One inverter module per box

Inverter Module

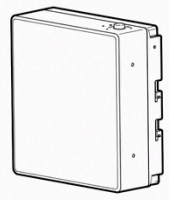

3. Tools and Materials

The following tools are recommended for NV Wave installations:

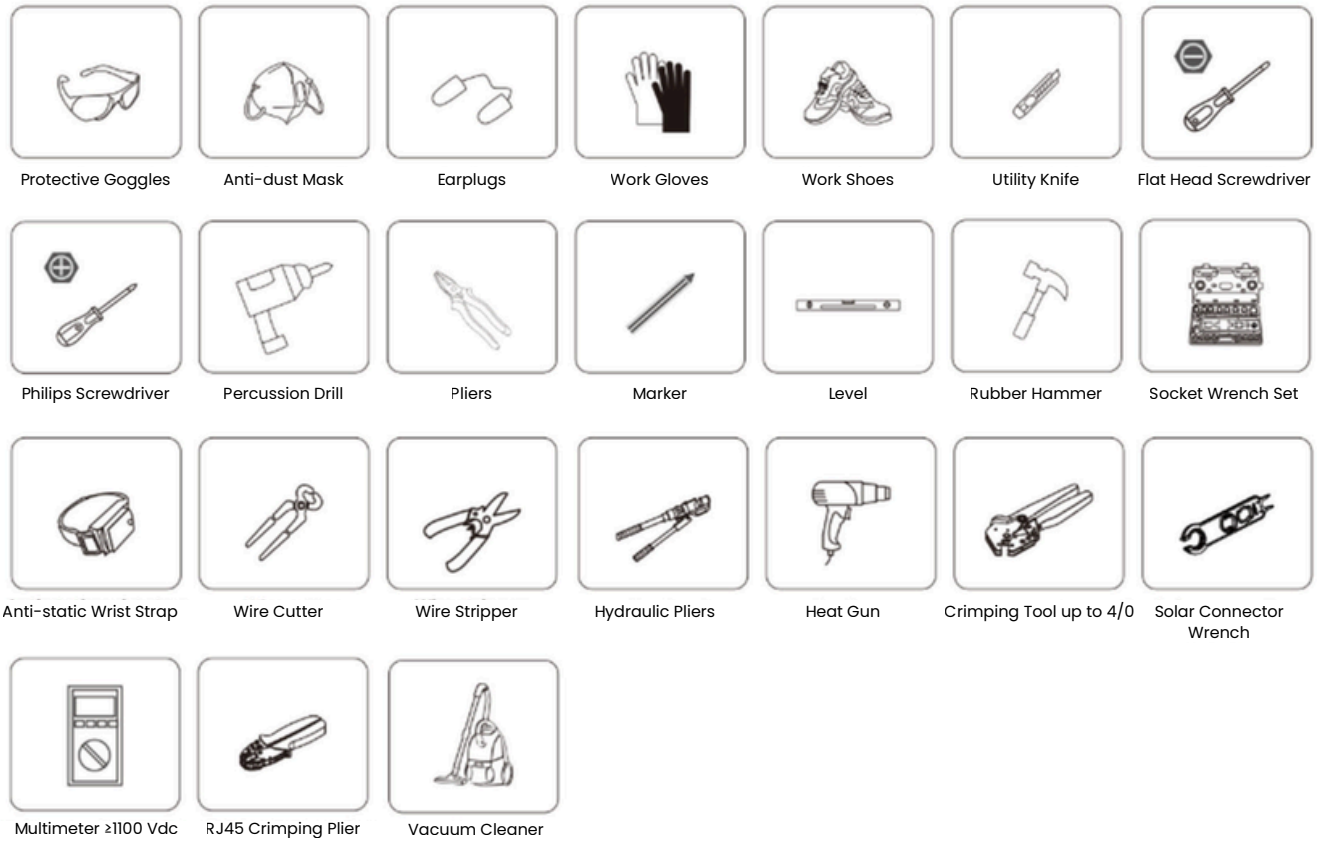

4. Parts List

Main Components (5 Boxes minimum)
Wave Box (Enclosure and Cover)
Inverter Box
Inverter (2.4kW)
Battery Module (3.46kWh)
AController

Required Accessories (supplied by installer)
Panduit Corp LCMA70-10F-L
Flat Head Mounting Screws
Combiner Box (required for 3-enclosure configurations only)
Battery Cable Lugs

Optional Components
240/120V Auto Transformer (5KVA) for use with optional back-up power

Optional Accessories (supplied by installer)
Main Breaker, Siemens QR22B200 (DO NOT install any other breaker type) Other approved models by Siemens include QR22B150, QR22B125, QR22B100
Bypass Breaker (Siemens QR22B200, 240V/ 2P / 150A-200A)
CT Kit (2 Split Core CT, 200A/100mA)

5. Installation Requirements

5.1 Overview

The NV Wave system can be installed in the following environmental conditions:

Environmental Requirements:

- Ambient temperature: -20 ºC to 55 ºC (-4 ºF to 131 ºF)
- Relative humidity: 5% to 95% (non-condensing)
- Altitude: ≤4000m (13,123 ft) if over 2000 m, complete 10% deration
- Clearance: Minimum 3 feet from explosive or flammable materials
- Foundation: Concrete structure, brick wall, min 2x4 stud wall or approved load-bearing surface
- Installation in coastal or marine environments, or at locations exposed to salt air or salt spray, is prohibited
- Chemical protection: Protected from corrosive chemicals
- Fire safety: Smoke alarms may be required per local building codes
- Mount the NV Wave at least 18 inches above grade to allow room for all terminations, accessibility, air flow, and to avoid moisture

Installation Surface:

- The mounting location must support a minimum distributed load of 600 kg (1,323 lb) to accommodate the maximum NV Wave configuration (three enclosures, with a fully loaded system weighing approximately 600 kg / 1,323 lb)
- Walls must be flat, structurally sound, and perpendicular to the ground
- Adequate ventilation clearances maintained

Water Protection:

- Install in an area with no flood risk
- Do not install under or near water sources such as downspouts, sprinklers, or faucets
- Avoid snow accumulation on or around the system

5.2 Site Location

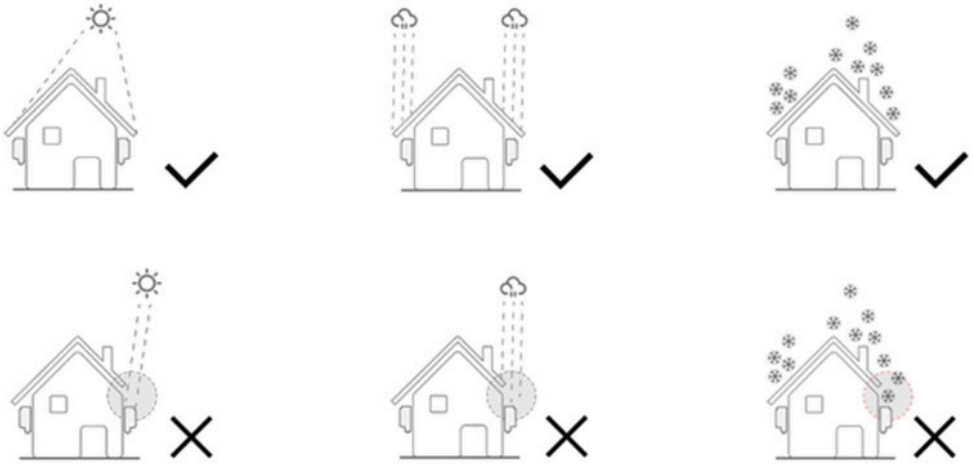

- Avoid excessive southern sun exposure that could raise the ambient temperature above the allowable 55 °C (131 °F).
- The NV Wave is outdoor rated (NEMA 3R); however, ensure that roof runoff or concentrated rainwater does not fall directly onto the unit.
- Prevent excessive snow accumulation around the equipment; make sure the unit is not positioned where roof snow avalanches could fall onto it.

5.3 Clearance Requirements

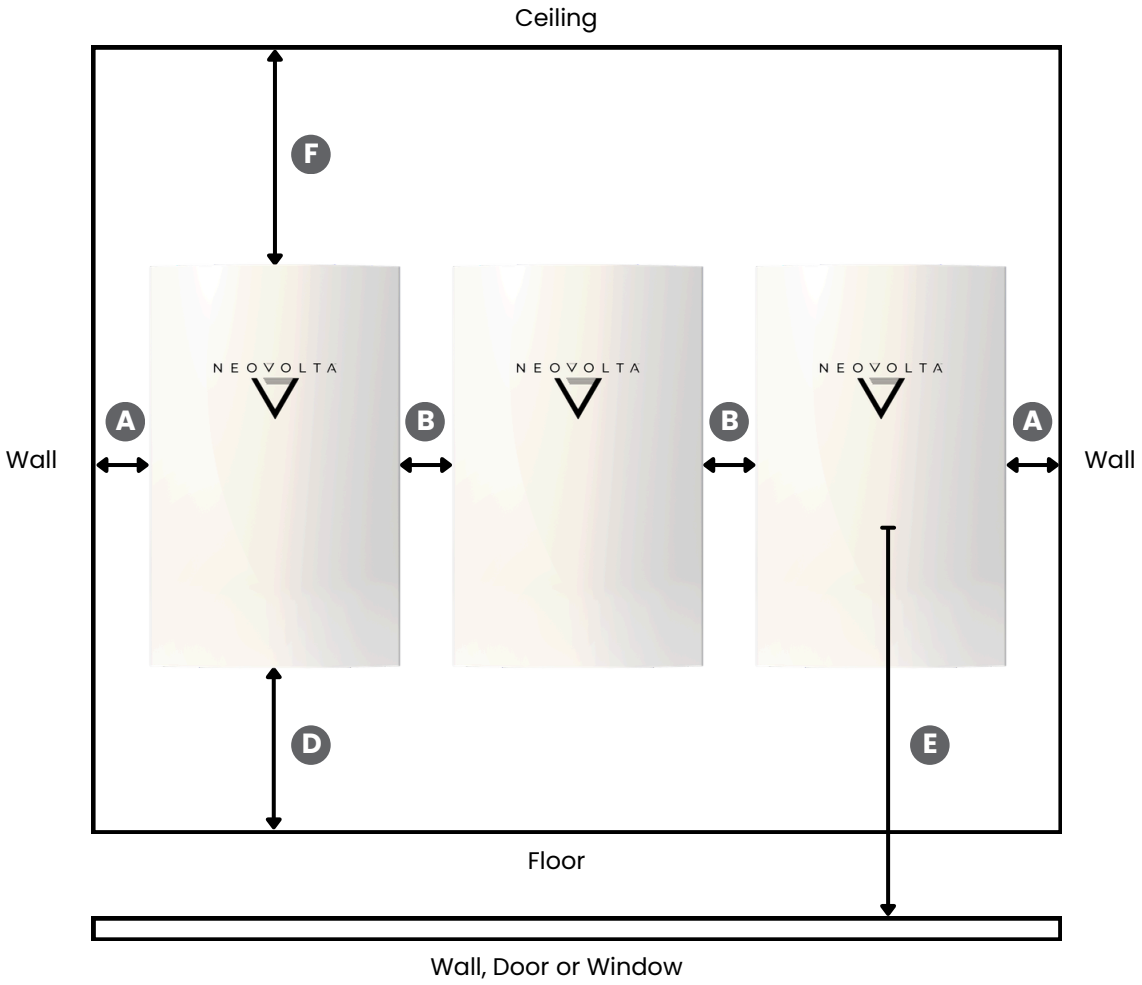

A = Distance from the unit to the left wall:	A = 6 in (152.4 mm)
B = Distance from the unit to next unit:	B = 6 in (152.4 mm)
C = Distance from the unit to the back wall:	C = 0.5 in (11 mm)
D = Distance from the unit bottom to the floor:	D = 18 in (460 mm)
E = Distance from the unit front to exposures and means of egress:	E = 36 in (915 mm)
F = Distance from the unit top to the ceiling:	F = 24 in (610 mm)



Warning: Do not install shelving, storage, or obstructions above the unit
Venting Direction: UPWARD - maintain clear path.



Safety Note:

- The enclosure weighs approximately 50 lbs (23 kg) empty.
- Fully assembled, the NV Wave Main Enclosure will weigh approximately 466 lbs (215 kg). A battery-only enclosure weighs approximately 417 lbs (189 kg).
- The heaviest component weight is 55 lbs (25 kg). Use proper lifting techniques and adequate personnel during installation.

6 NV Wave Main Unit Installation

6.1 Mounting the NV Wave Main Unit Enclosure

CAUTION

Caution: All NV Wave enclosures will arrive with rubber plugs in the holes used for wall mounting. Do not remove any plugs from the NV Wave enclosure to ensure that the unit stays sealed against water intrusion, per NEMA 3R guidelines.

1. Locate the studs at the installation site, either 16 O.C. or 24 O.C. (Disregard for installation locations with cinder block walls).

2. Mark the holes for the NV Wave enclosure based on the hang configuration.

3. Screw the wall bracket into place. Be sure to choose the right fastening anchors to securely mount the enclosure to the wall.

    - We recommend using four (4) 3/8 in flat head screws such as the LedgerLOK Flat Head Structural Ledger board screws. There are two screw holes on either side of the bracket.

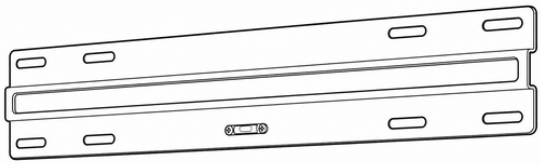

Wall Bracket

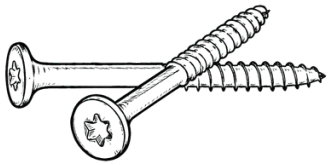

Flat Head Screws

Important Note: The mounting screws used for the enclosure must be flat to allow the NV Wave internal components to be installed correctly.

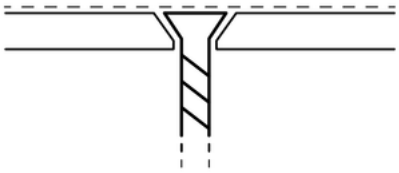

Screws Must Be Fully Flat

4. After the wall bracket has been securely affixed to the wall, hang the Enclosure Base, aligning the mounting holes of the enclosure with the mounting holes of the Wall Bracket.

5. Secure the enclosure using six (6) 3/8 flat head screws such as the LedgerLOK flat head structural screws referenced above.

Mounting Holes

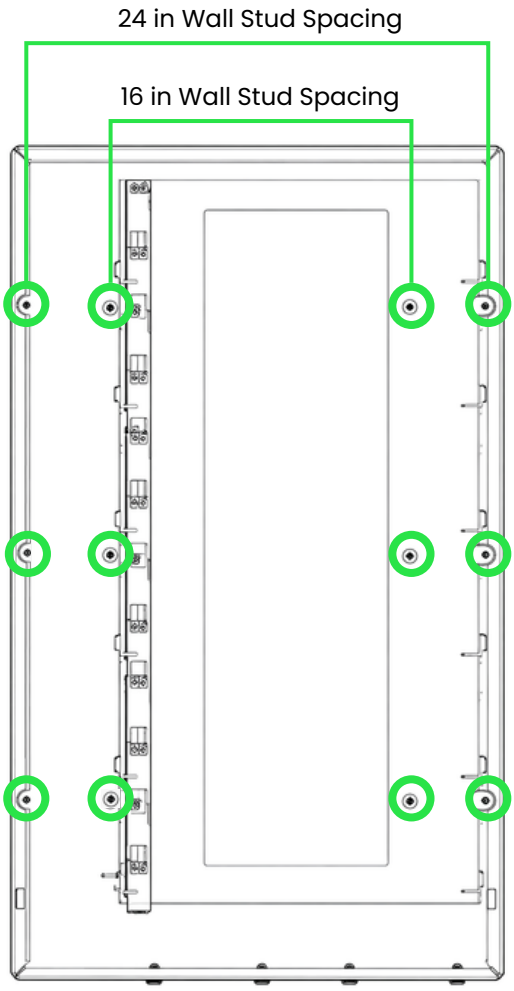

6.1.1 NV Wave Wall Mounting Notes

- Do not use mounting screws with a head thickness of 1/8 in (4 mm) or greater since the screw head will protrude too far into the enclosure housing and impede the installation of the battery modules.
- The NV Wave enclosure unit will arrive from the factory with the enclosure brackets riveted on, and a separate wall bracket to attach to your wall.
- We recommend at least 18 in clearance from the floor to the bottom of the enclosure.
- The NV Wave wall bracket has mounting hole spacing for 16 in O.C., or 24 in O.C. stud wall framing. Select the set of holes to use based on the location of the studs in the wall.
- Mark the wall studs, then mark the hole. Pre-drill for your selected lag screws to ensure enough embedment for the screws into the studs or masonry wall.
- Lift and place the enclosure onto the wall bracket with the enclosure's top hooks engaged to hold the unit flush with the wall bracket.
- Mark the mounting holes in the enclosure. Use all six mounting holes based on your stud wall framing and close the non-used screw holes with the provided sealing plugs.
- Select lag screws to ensure enough embedment of the screw into the studs or masonry wall.
- Use the provided EPDM washers provided with the enclosure to create a watertight seal.
- The profile of the lag screws used to attach the enclosure to the wall needs to have a low profile, so that when attached, the head of the screw is flush. This allows the battery modules to be installed flush inside the enclosure.

6.2 AC Distribution Blocks

1. Remove the pre-installed AC Distribution blocks from the mounting bracket, retaining the screws for later use.

Note: If installing a battery expansion enclosure, you will need to complete the TPR interconnection step before reinstalling the AC Distribution blocks.

Refer to section 6.12 for steps on TPR interconnection.

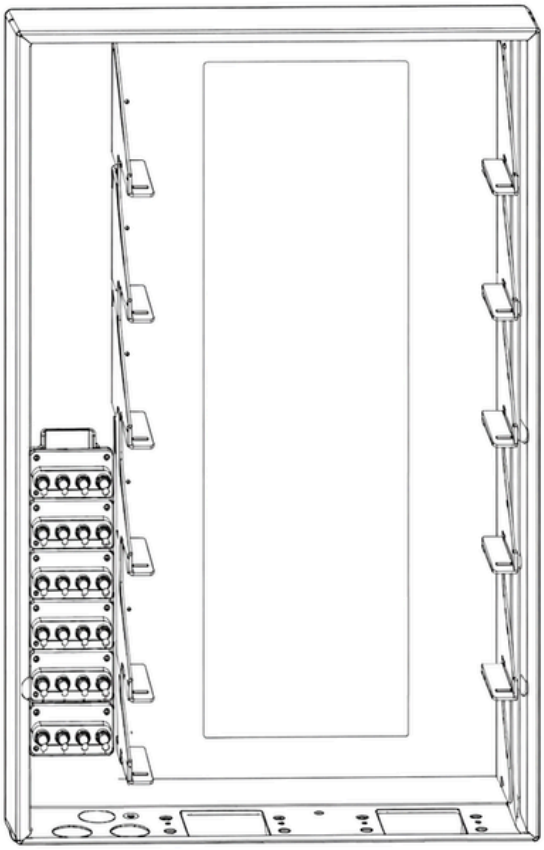

AC Distribution Block Assembly Location

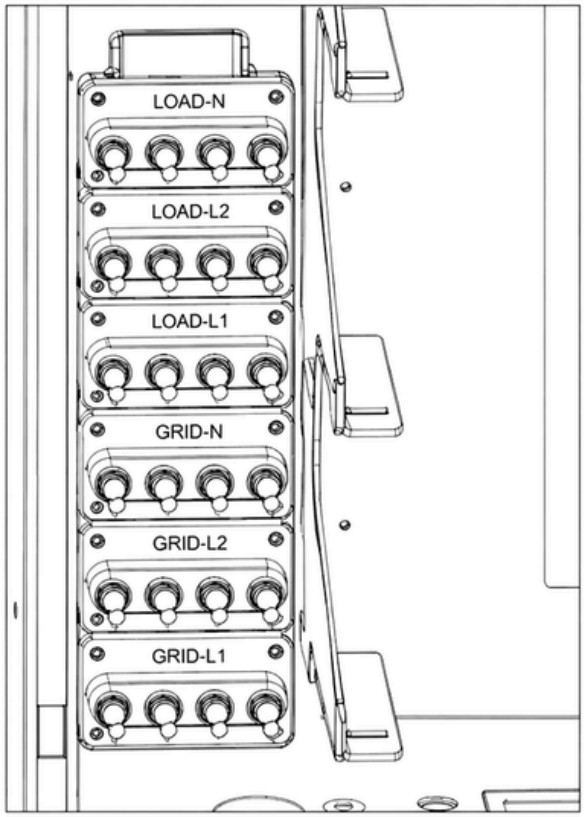

AC Distribution Block Terminal Identification

Note: Torque Values for the AC Distribution Blocks:
From 18.0 N·m to 22.0 N·m (175 lb-in); 14.0 N·m to 16.0 N·m (130 lb-in) is recommended

---

6.3 AController

The AController is installed centrally on the left side of the enclosure.

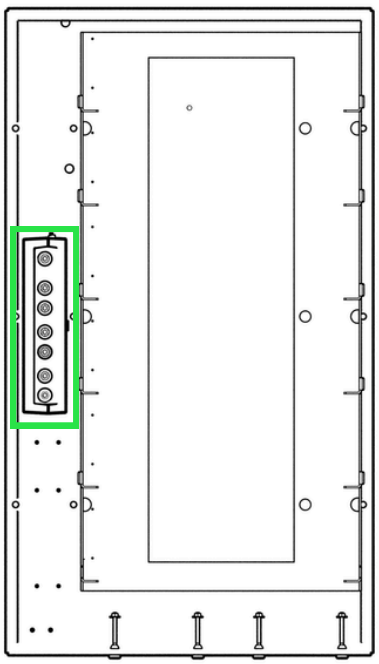

AController Location

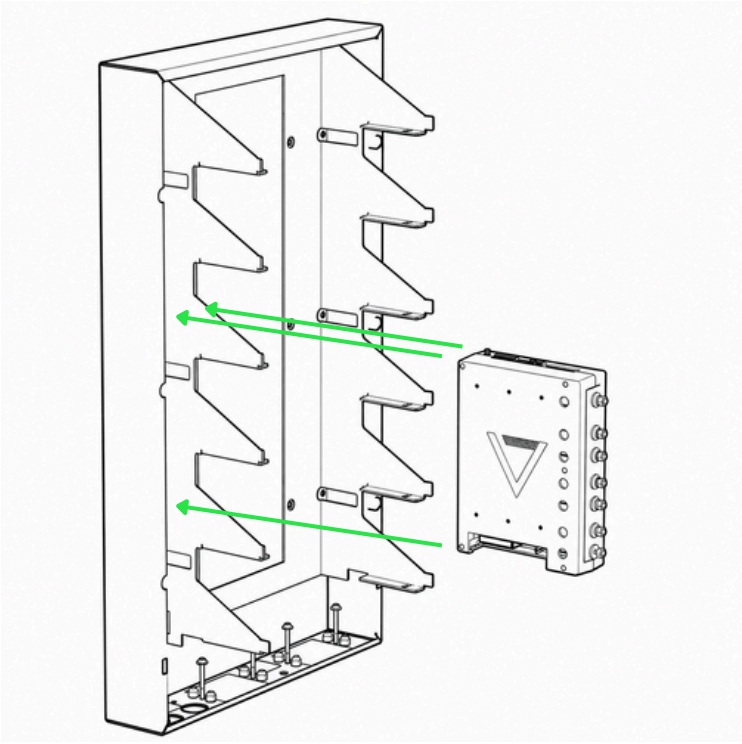

1. Align the teardrop-shaped screw openings on the long side of the AController with the pre-installed screws of the enclosure.

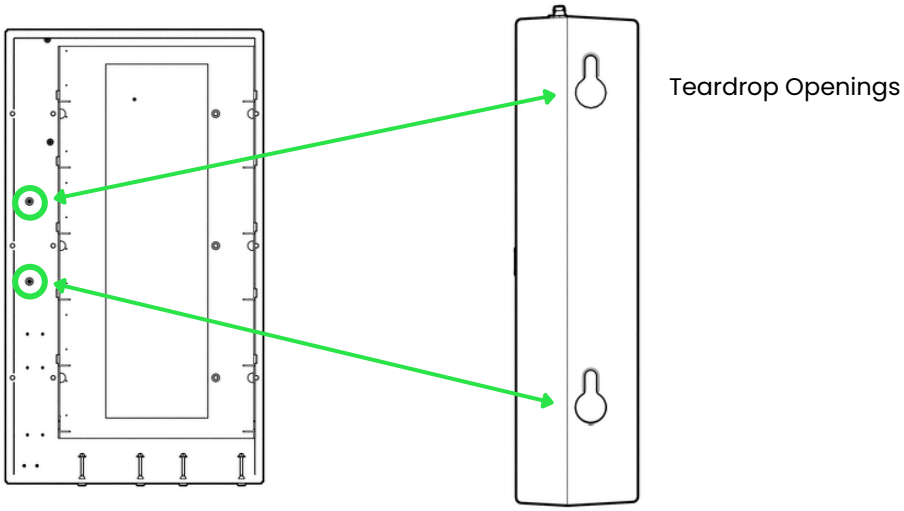

NV Wave Enclosure

AController Back

2. When the AController is aligned with the screws, slide the AController downward to secure it in place. Perform a soft “pull” test to ensure the screw heads lock into place.

3. There are seven pre-installed copper bolts located at the top of AController. These bolts will terminate into the busbar. Use the provided hex nuts to fasten the busbar into place.

4. The seven copper bolts are terminated in wire terminals that are pre-torqued in the factory. After the copper busbars are installed use an Allen wrench size 7/16 in to final torque these seven terminal lugs.

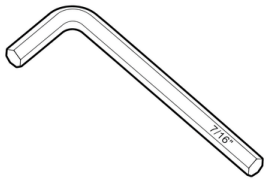

7/16 in Allen Wrench



Caution: Too much force can break the solder connection between the wire terminal and the PCB.

---

5. Included with the AController is an NV Wave ESS Nameplate Sticker to be attached to the side of the enclosure cover on either side. Be sure to wipe the area clean with a dry cloth for clean application of this sticker.



Note: AController PCB Wire Terminal - to AController Custom Pin Torque Values
The torque for B300-PCB wire terminal is very high - around 28.0 N·m (250 lb-in) requiring strong support of the wire terminal body while screwing to prevent carrier PCB damage.

AController Connections

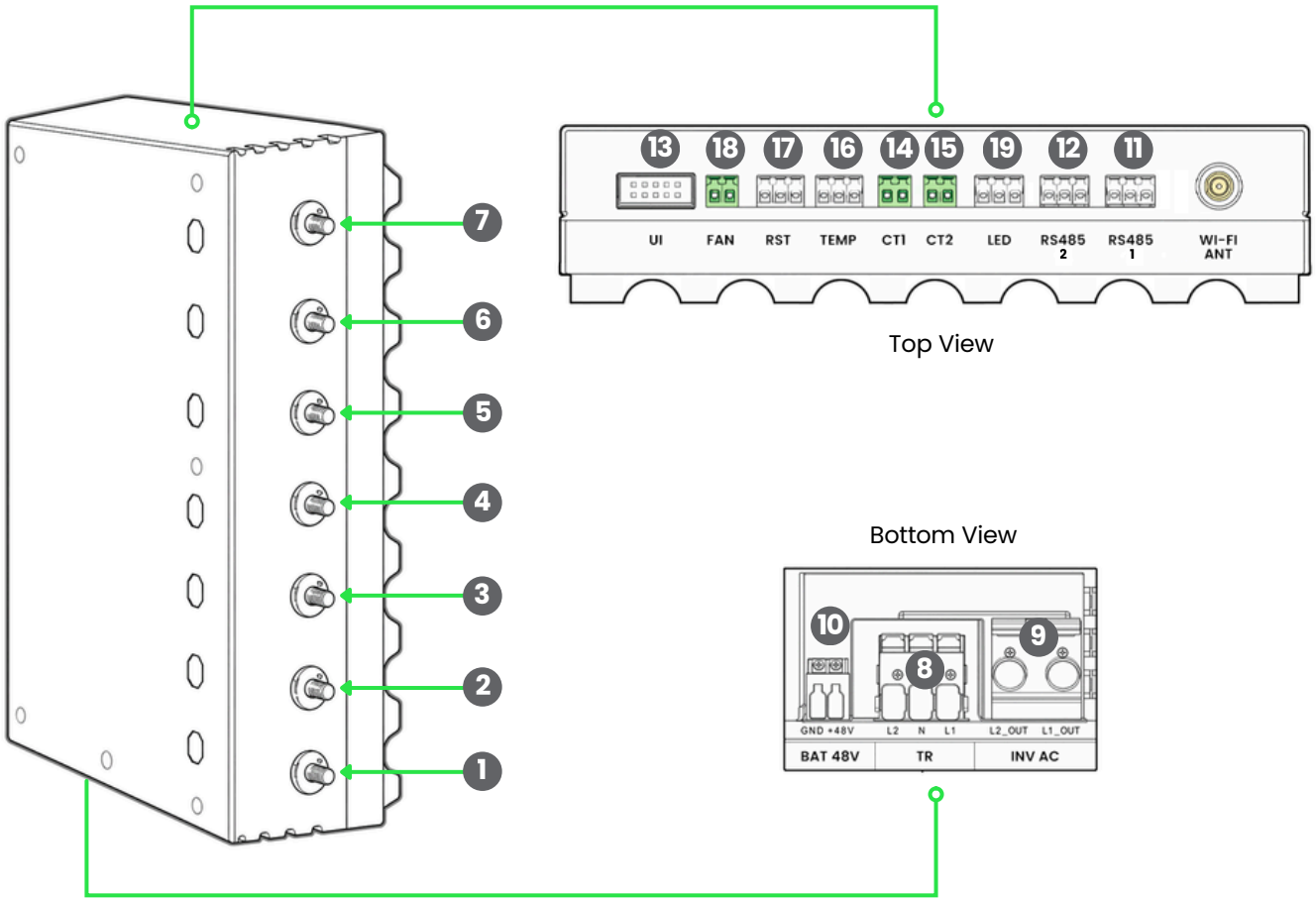

1. Grid- L1 In
2. Load- L1 Out
3. Grid- L2 In
4. LOAD- L2 Out
5. LOAD- N In
6. LOAD-N Out
7. Ground
8. Auto Transformer Out
9. Inverter
10. +48V Battery
11. Modbus 1 - Inverter
12. Modbus 2 - Battery
13. UI 10-Pin Connector
14. CTI
15. CT2
16. External Temperature Sensor
17. Reset Button
18. Fan
19. LED Terminal

AC-Busbar without AC Grid Breaker Installation

Important Note: If the AC-Grid breaker is not used then the AC-busbar L1-A/L2-A and L1-B/L2-B are not used.

Grid L1 and Grid L2 supply feeder wires terminate directly into the Grid L1 and Grid L2 terminal lugs of the AController.

Between the front of the AController and the Enclosure Cover is a 2 in gap.

Be sure to bend the feeder wires appropriately so the Enclosure Cover can be reinstalled without pressing against the feeder wires.

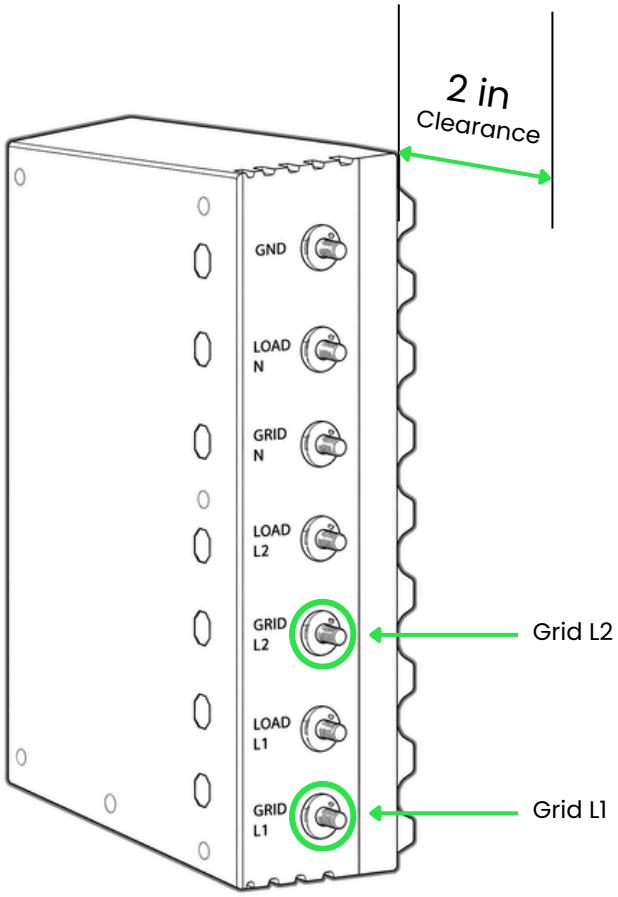

AController Front View

Note: Torque Values for AController PCB Wire Terminal to AC Grid Wire with Lug

- For thin-wall lugs (end-cord terminals) 20 N·m (180 lb-in)
- For solid pin lugs is 28.0 N·m (250 lb-in)

In the second case, strong support of the wire terminal body is required during screwing to prevent carrier PCB damage.

CAUTION

Caution: Support AController while torquing. **Do not over torque.**

6.4 (Optional) Main AC Breaker Installation

The Siemens QR22B200 is the required breaker for use with the NV Wave. Installation of any other breaker model or manufacturer will result in a physical fit incompatibility and will void UL 9540 certification.

If a smaller size is required, the following Siemens breakers are approved alternatives:

- Siemens QR22B150 (150A)
- Siemens QR22B125 (125A)
- Siemens QR22B100 (100A)

No other breaker models or manufacturers are approved for use with the NV Wave.

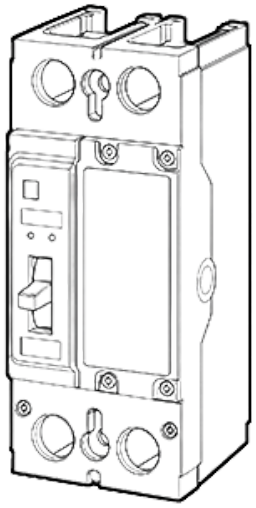

Siemens QR22B200
200A 2 Pole Molded
Case Circuit

Installer-Provided Connection Hardware:

- 4x Stainless Steel 3/8 - 16 x 3/4 in hex bolt or cap screws
- 4x Stainless steel flat washer + beveled washer or split lock washer
- Torque values 225 in-lb (25.4 N·m)
- Proper layering for connection hardware:

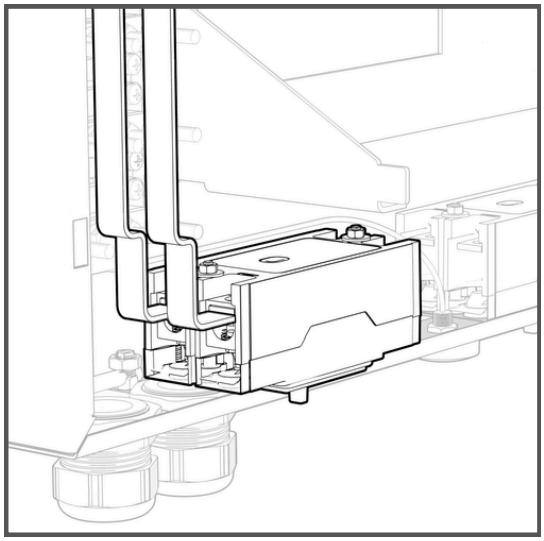

Circuit Breaker with AC Busbars

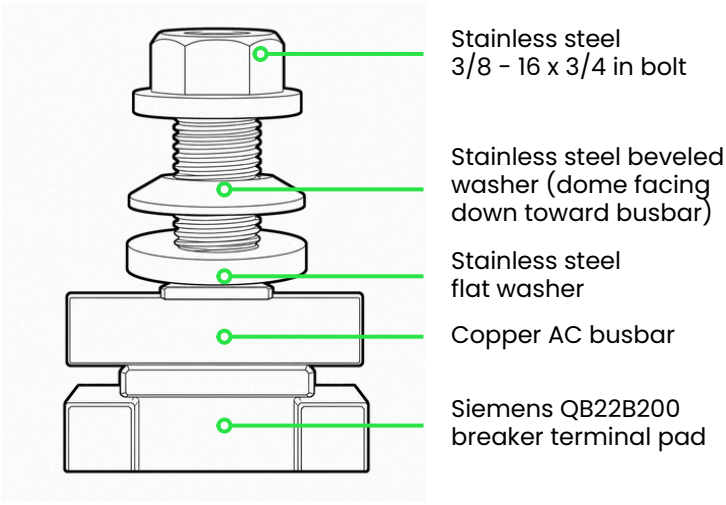

Circuit Breaker Install Side-View

Note: Circuit Breaker mounting screws are pre-installed with the enclosure and shall be used to fasten the breaker to the enclosure.

AC Breaker Busbar Installation:

1. Affix the Siemens QR22B200 circuit breaker in the left breaker location using the pre-installed machine screws; the flat washers and the hex nuts are provided by the installer.

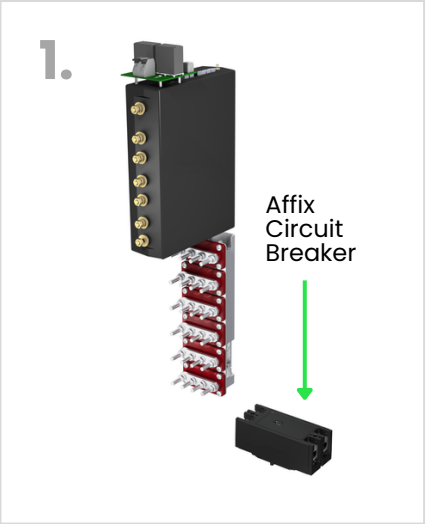

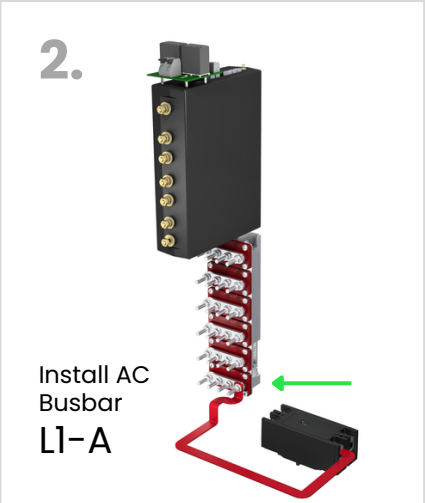

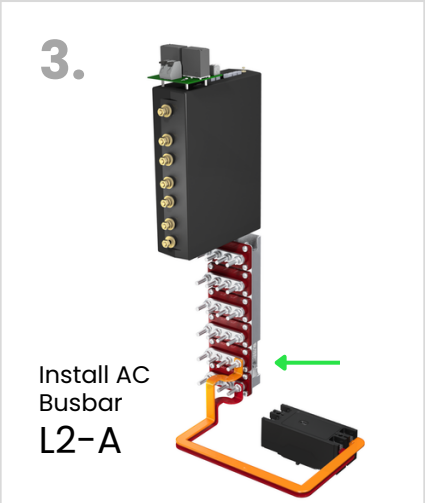

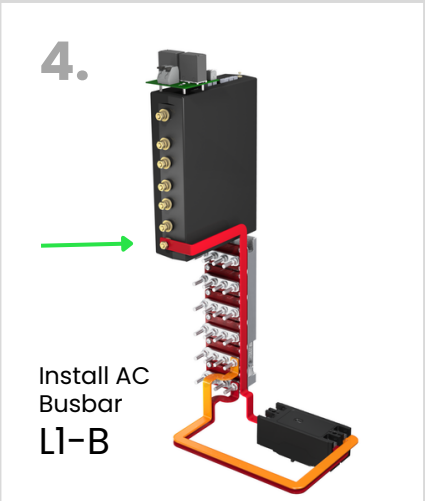

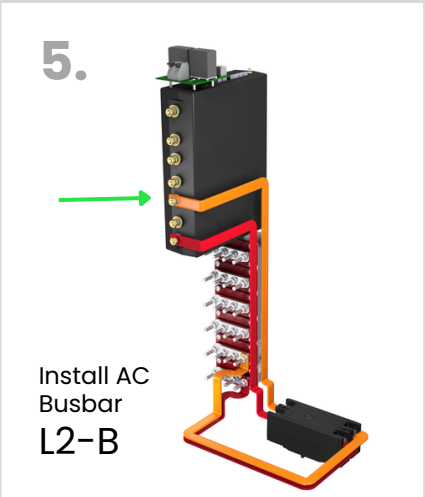

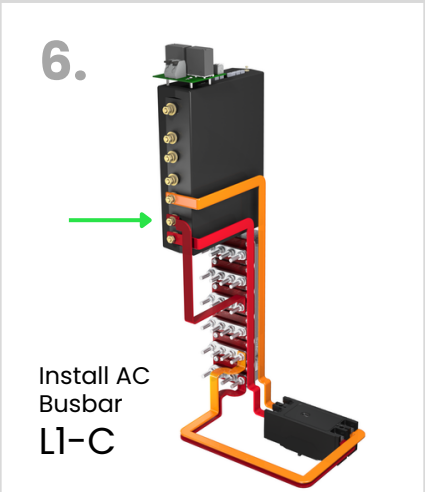

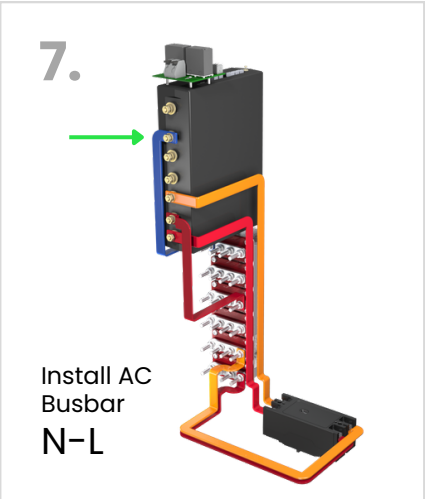

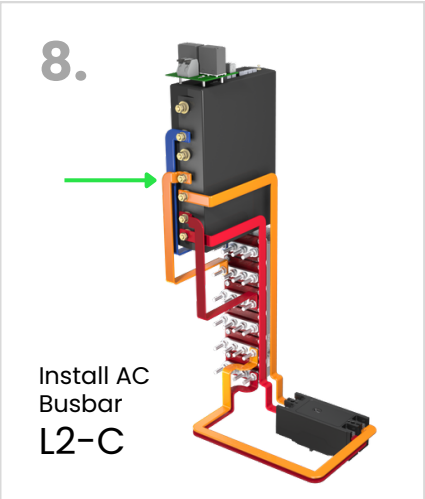

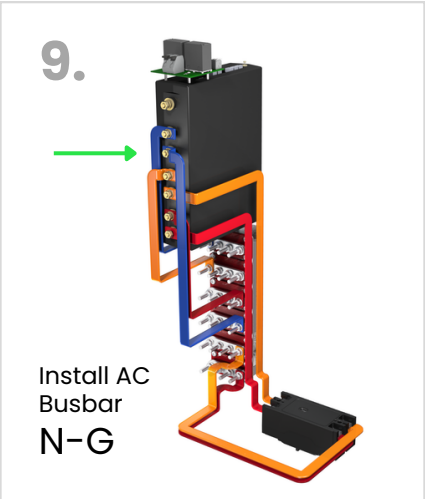

AC Breaker Busbars Installed

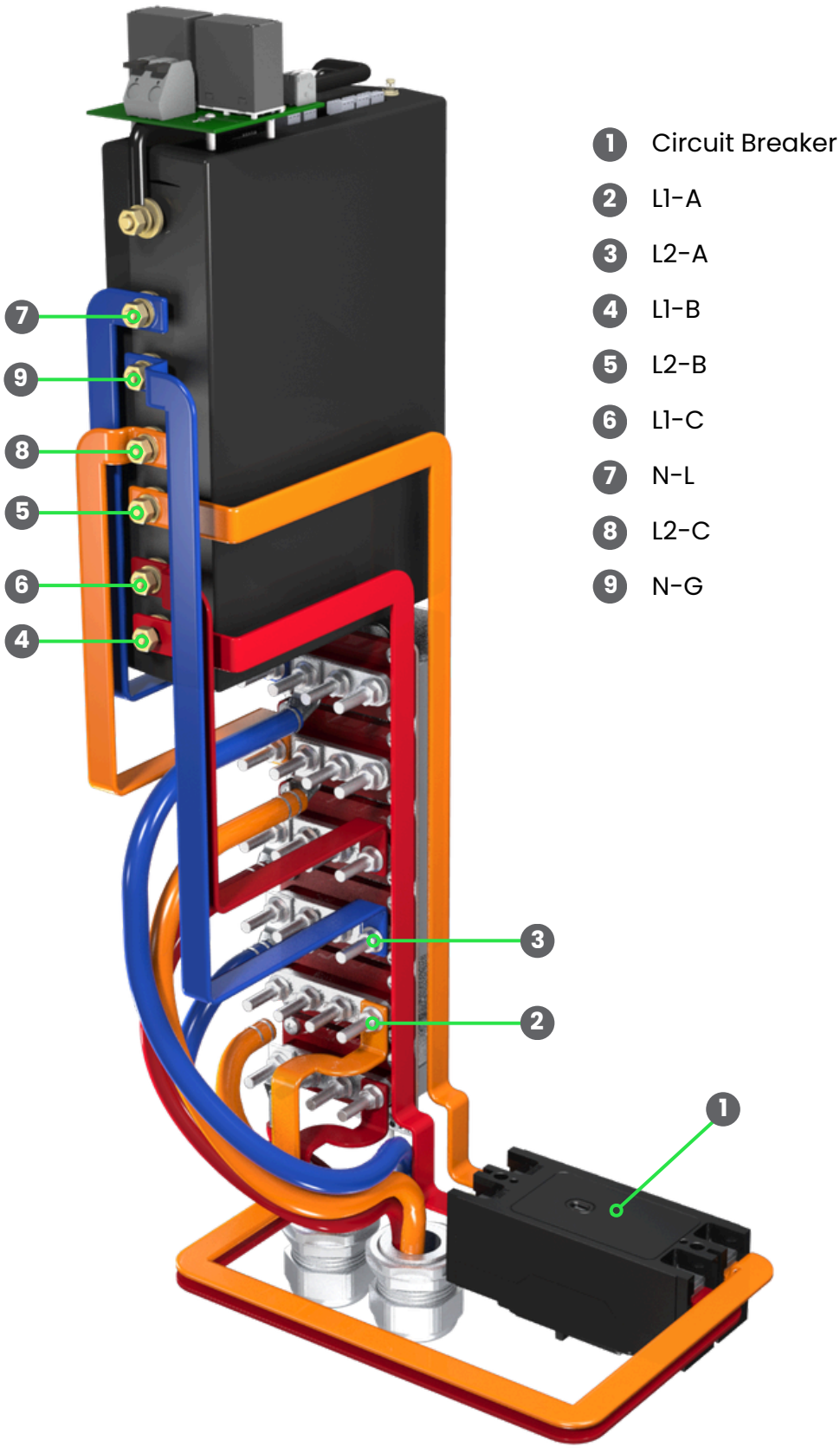

6.5 E-Stop and EPO Switch Installation

The E-Stop printed circuit board is pre-mounted on top of the AController.

The circuit board is not numbered, so we have numbered it here as a reference:

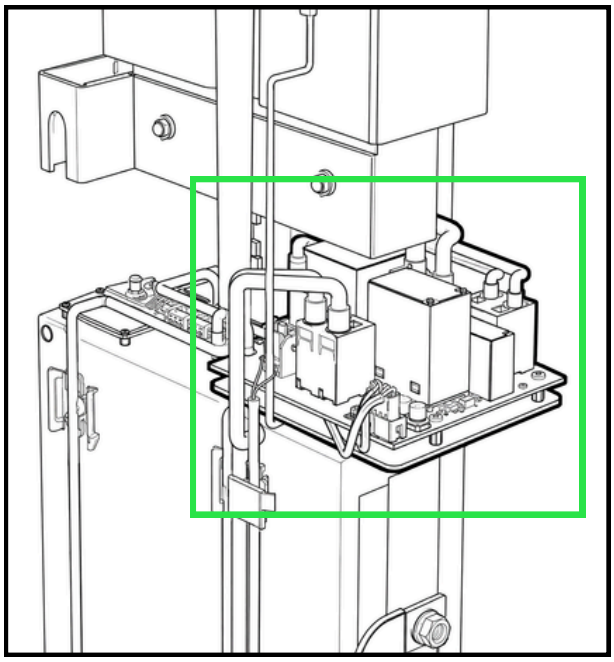

E-Stop Position

*Some circuit boards will be printed with labels, some won't. We have a labeled diagram here for your reference.

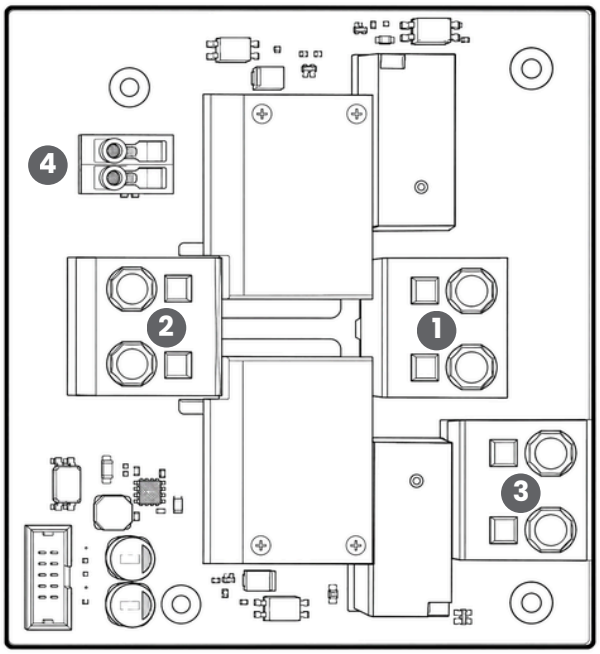

E-Stop PCB Diagram

1. Inverter Box to E-Stop IN
2. AController to Inverter port
3. Auto Transformer Circuit Connection
4. Emergency Power Off Connection

- The external EPO Switch (Emergency Power Off Switch) is optional, and installed according to guidance of the Fire Department or AHJ
- The EPO Switch needs to have a NC dry contact (normally-closed). Use a suitable 2-wire cable to connect the NC dry contact of the EPO to the E-Stop PCB wire terminal port #4

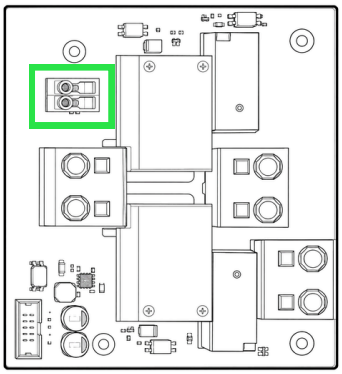

E-Stop PCB Diagram

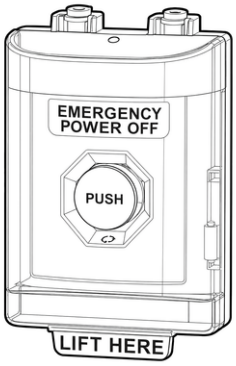

Emergency Power Off Switch

6.6 Grid Main and Load Connections

6x 2/0 one-hole compression lug, 90 degree angle, standard barrel, copper, (Panduit Corp LCMA70-10F-L)

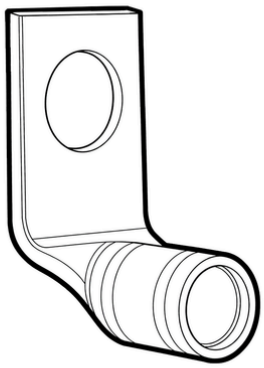

Panduit Corp LCMA70-10F-L
Wire Connector

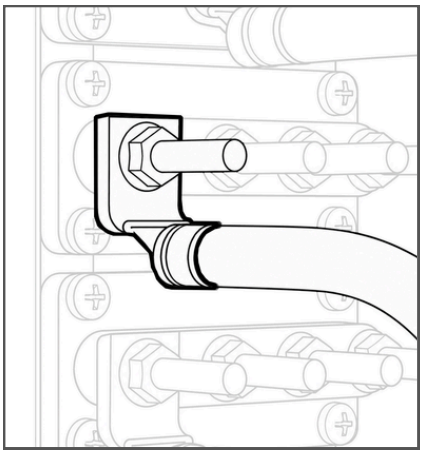

Wire Connection

Torque Values

AController copper pin to busbar - M8 threaded copper pin conjoined with lock washer - from 8.0 N·m to 9.0 N·m (75 lb-in)

The wire connection pin requires a special technique of screwing:

- Stage 1 - compression up to 5.0 N·m, then leave free
- Stage 2 - final setting with slow motion up to 8.0 N·m without any back rotations

For the grounding block wire fixation:

- Grounding bar PK5GTA - compress 4AWG copper wires - from 3.5 N·m to 4.0 N·m (35 lb-in)

6.7 Auto Transformer (Whole Home Backup - Optional)

Note: If using the Auto Transformer, complete the AController wire harness connections (refer to section 6.3) before installing the Auto Transformer.

The Auto Transformer is installed in the left upper portion of the enclosure.

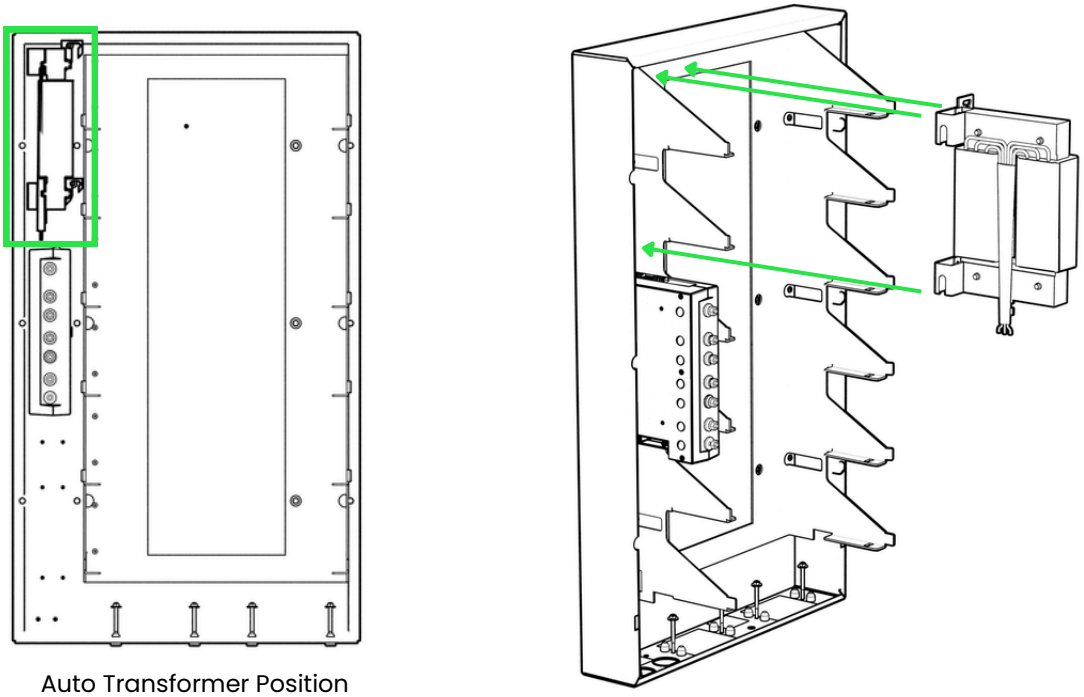

Auto Transformer Position

1. There are two studs where the Auto Transformer compartment is located; these studs will serve as points of contact for the hooks located on the back of the Auto Transformer.

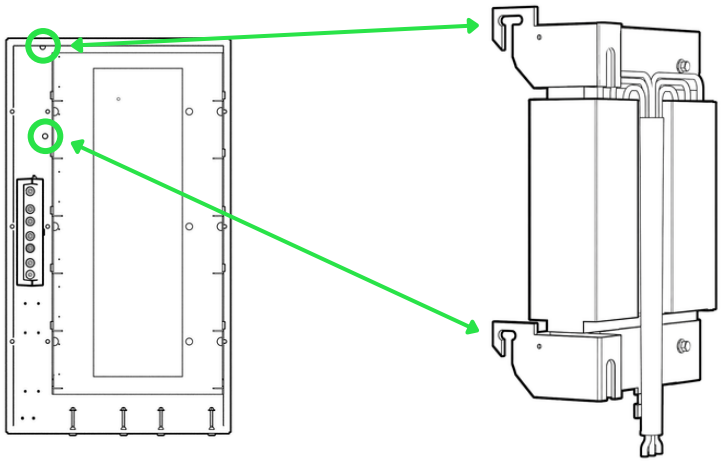

Auto Transformer Back View

2. Hang the Auto Transformer on the mounting studs using the provided M8 hex nuts.

3. Connect the Auto Transformer power wires L1/L2 (black) to the E-Stop PCB wire connection port #3.

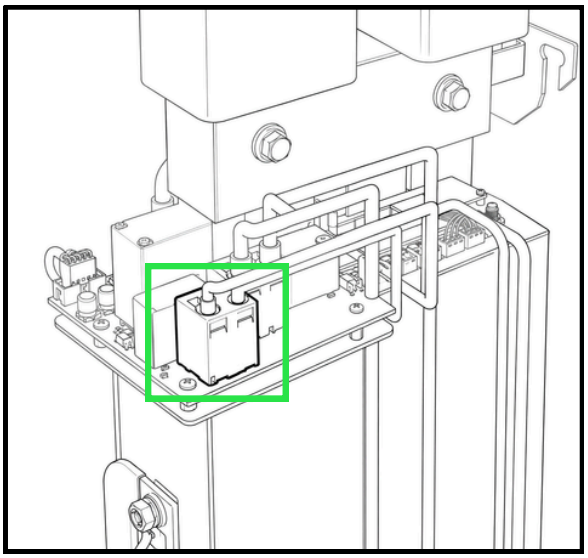

Auto Transformer Circuit Connection

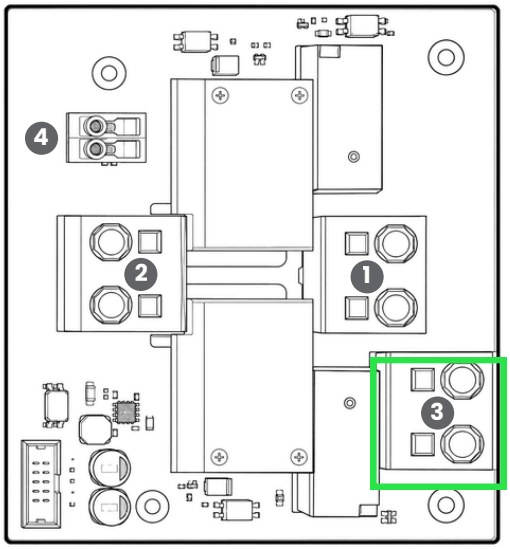

E-Stop PCB Diagram

4. Connect the Auto Transformer N-wire (blue) to the TR connection port on the AController. Connect it to the center connection pin.

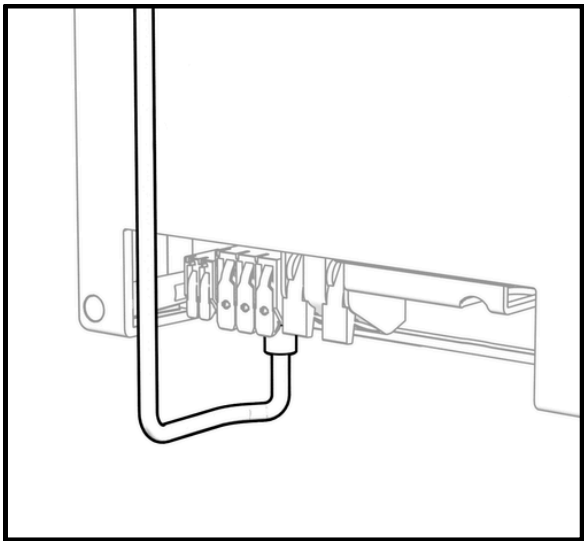

AController

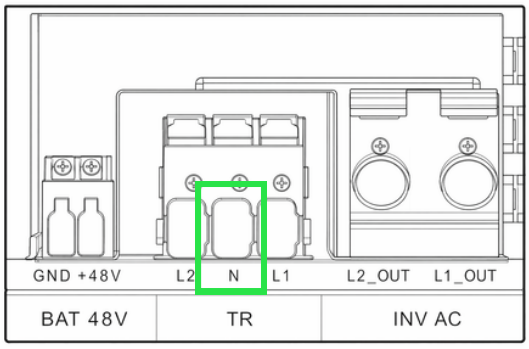

6.8 Inverter Box Components

1. Inverter 240V Output Connection
2. Ground Connection
3. RJ45 Communication Ports
4. 48V DC Axillary Output
5. Inverter Module Connection Port
6. Inverter Module Compartment
7. Cooling Fans

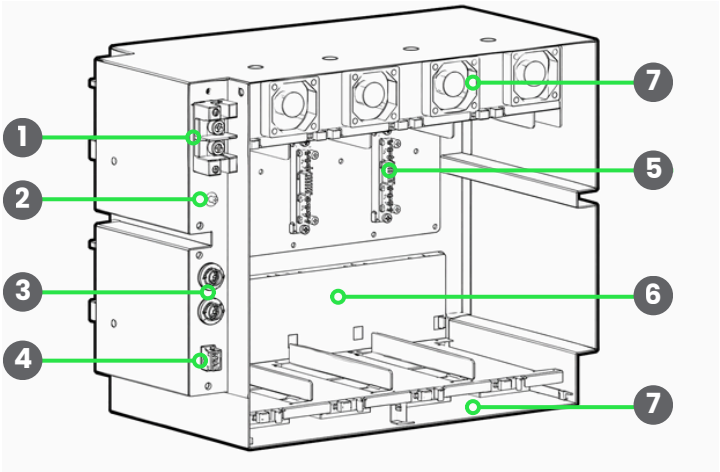

- The Inverter Box is installed at the bottom of the enclosure beneath the battery compartments.
- The Inverter Box rests on the bottom two shelves or “fins” of the enclosure.
- The Inverter Box has guides on the sides for engaging with the fins.

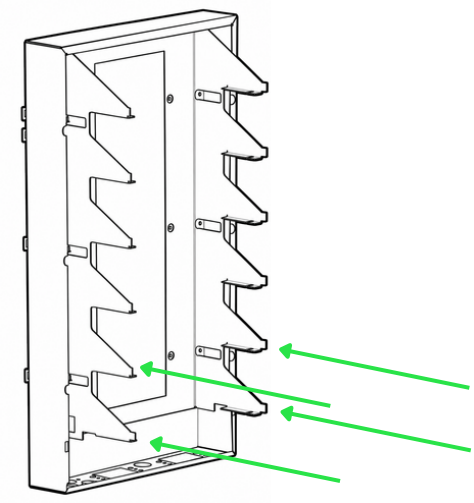

Enclosure with “fins”

On the bottom fin are two screw holes on both sides (four holes total).

These holes match up with threaded screw holes located at the bottom of the Inverter Box.

Use the provided M5 screws to secure the bottom of the Inverter Box to the bottom of the enclosure.

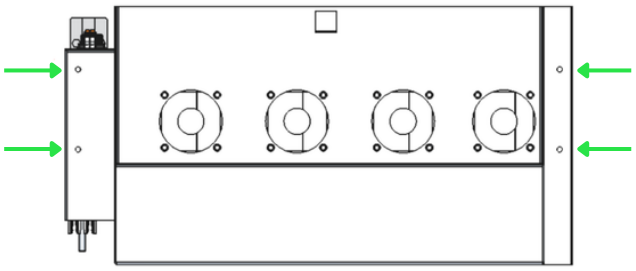

Bottom view of the Inverter Box with screw holes

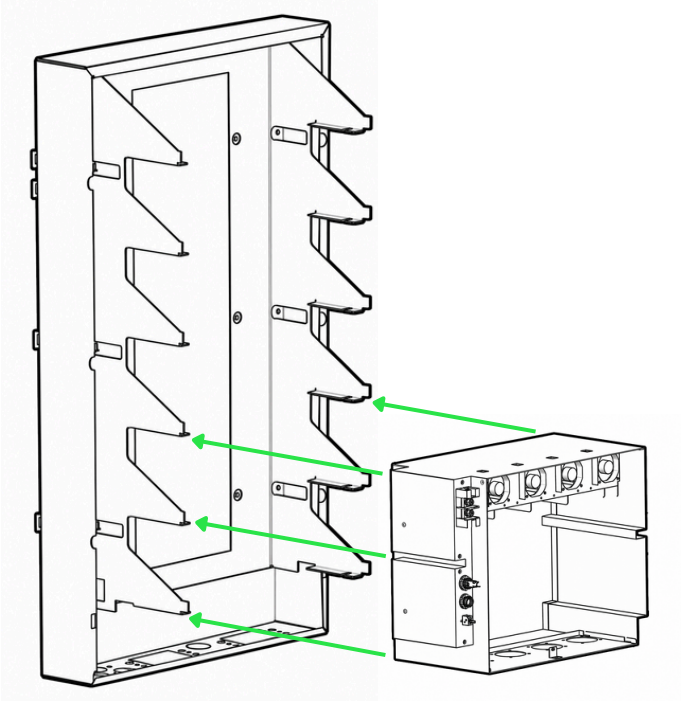

1. Align the Inverter Box so it engages with the battery compartment grooves, sliding it securely into place in the enclosure.

   Be sure to apply even pressure on both sides as you slide the Inverter Box.

2. With one hand on each side of the Inverter Box, push firmly against the TPR.

   The silver guiding pins will align with the TPR.

   Use the provided #6 AWG wire to connect the inverter box to the AController Inverter connection port.

3. Remove the plastic cover on left side of Inverter Box to expose AC L1 and L2 connections.

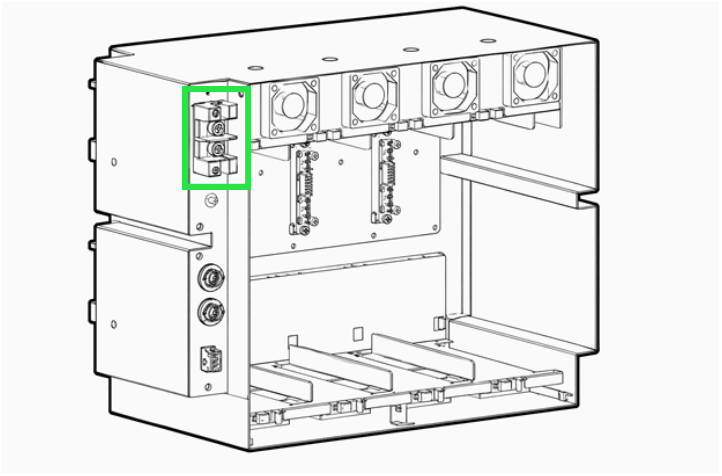

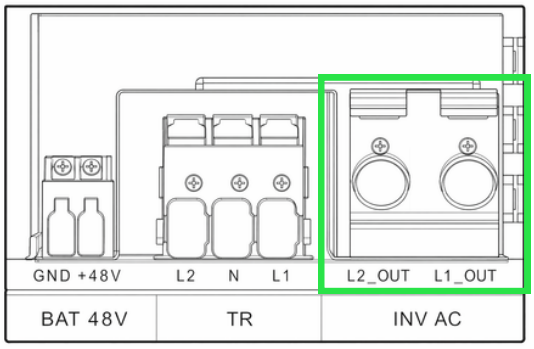

Inverter Box Communication to AController Wiring

4. For wiring the Inverter Box to the AController, connect a #6 AWG wire harness with the cable lug from the Inverter Box AC connection through the E-Stop PCB connection port #1.

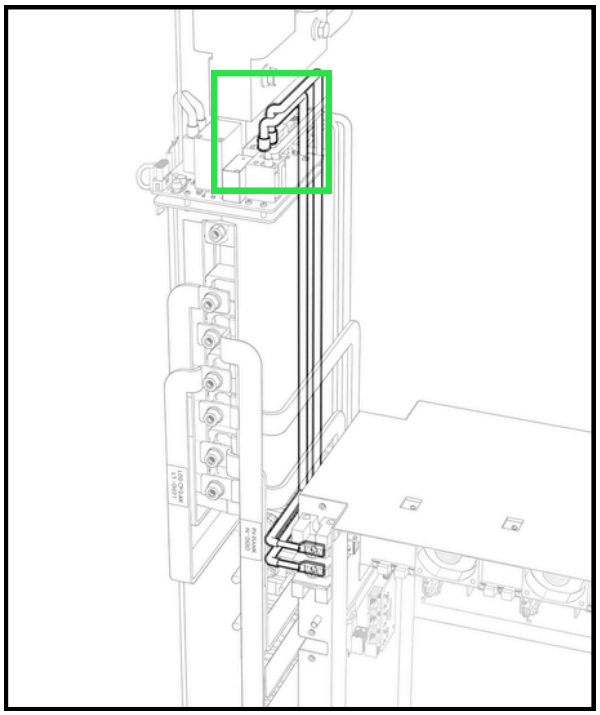

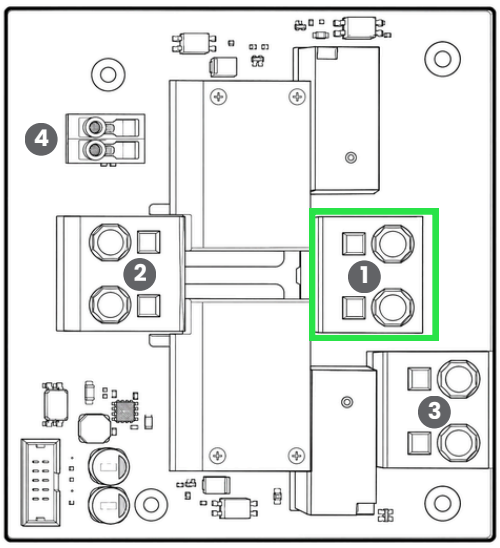

E-Stop PCB Diagram

5. Connect a #6 AWG wire harness from E-Stop PCB connection port #2 to the Inverter input on the AController.

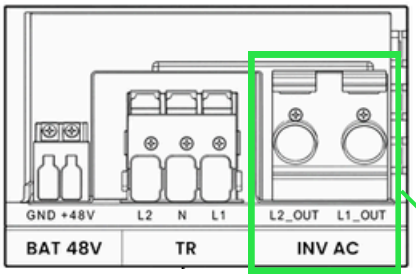

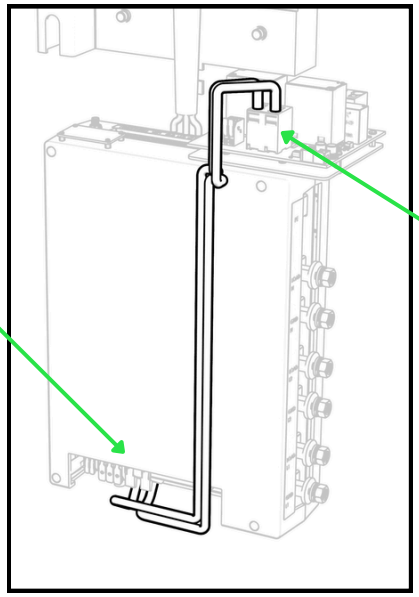

AController

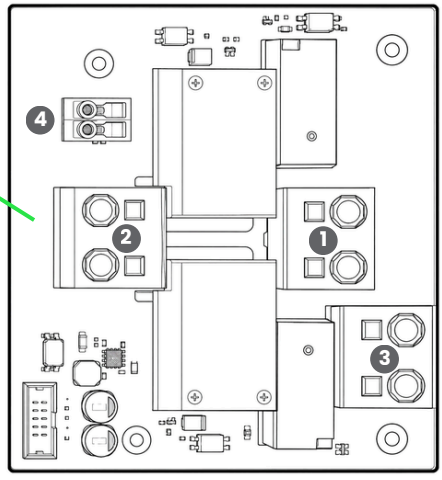

E-Stop PCB Diagram

6. Next, install the provided communication harness. This harness has an RJ45 connector on one end, and two 3-pin, 3.5 mm screw terminal blocks on the other side.

7. Plug the RJ45 connector to the wire harness into the top RJ45 port on the Inverter Box.

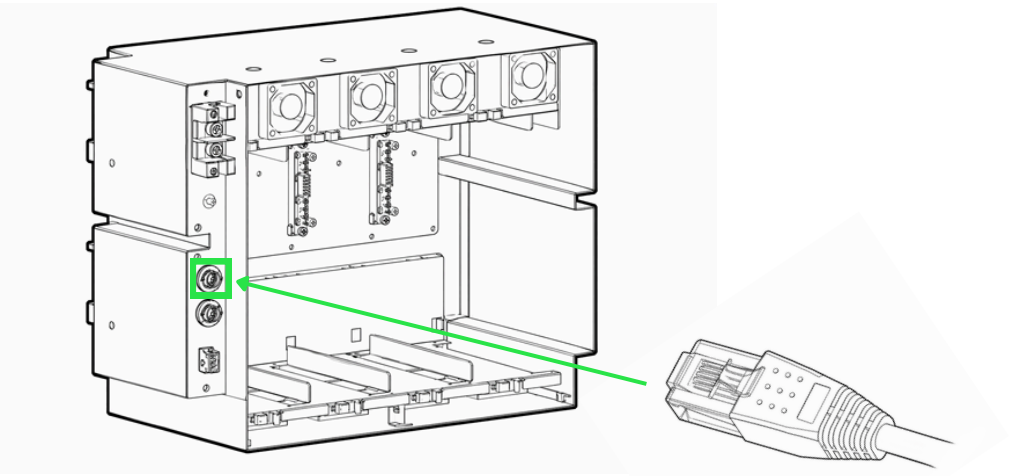

Inverter Box RJ45 8P8C

8. Plug the two green 3-pin 3.5mm screw terminal blocks into the RS485-1 and RS485-2 Ports on the AController.

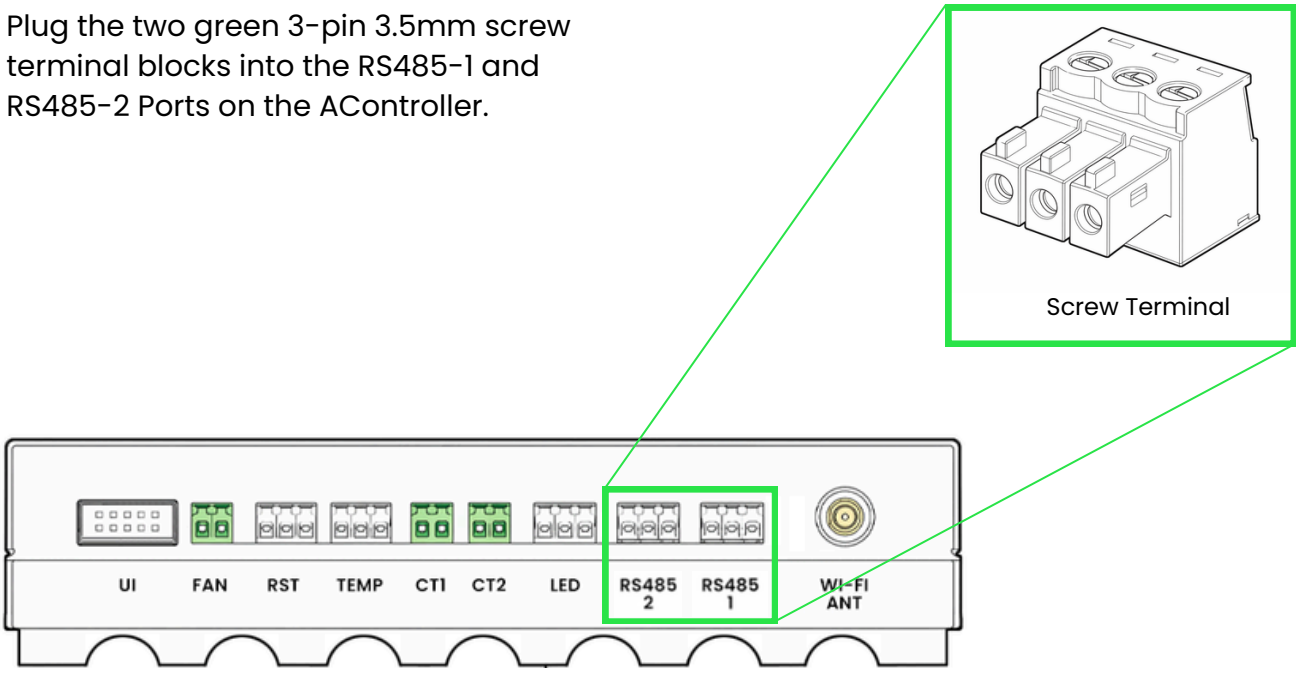

AController Top

9. Install external EPO Switch (Emergency Power Off Switch) according to guidance of the Fire Department or AHJ.

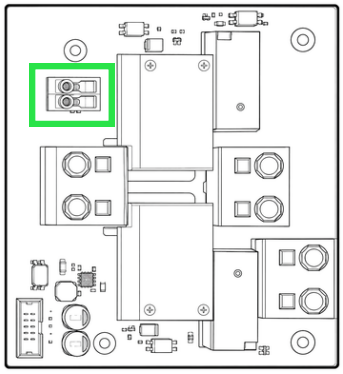

E-Stop PCB Diagram

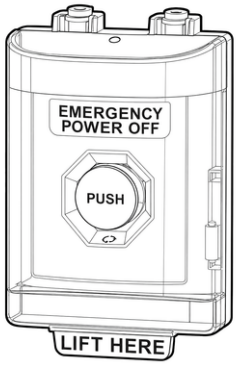

Emergency Power Off Switch

Note: The EPO Switch needs to have a NC dry contact (normally-closed). Use a suitable 2-wire cable to connect the NC dry contact of the EPO to the E-Stop PCB wire terminal port #4.

6.9 Temperature Sensor

The temperature sensor is pre-installed inside the Auto Transformer.

A small temperature sensor wire lead extends from the Auto Transformer. This wire must terminate into the small PCB mounted to the top of the AController.

1. To terminate the sensor wire, the installer must first remove the small PCB to access the screw terminals.
2. Once this wire is terminated, remount the PCB.

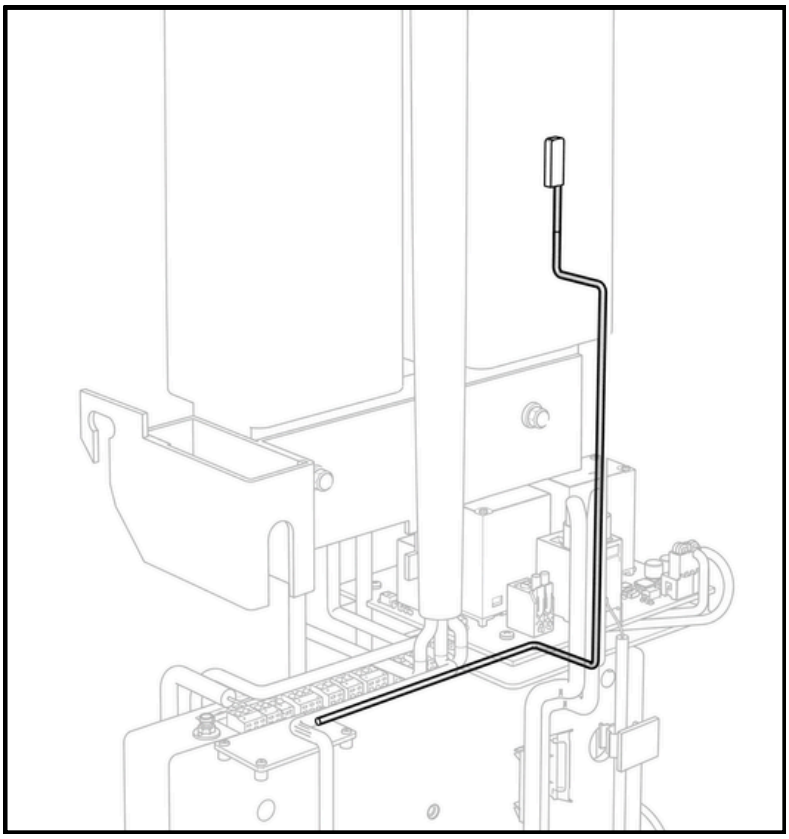

6.10 Inverters

1. Move all Inverter Box Interior Cables out of the inverter slide paths prior to installation.

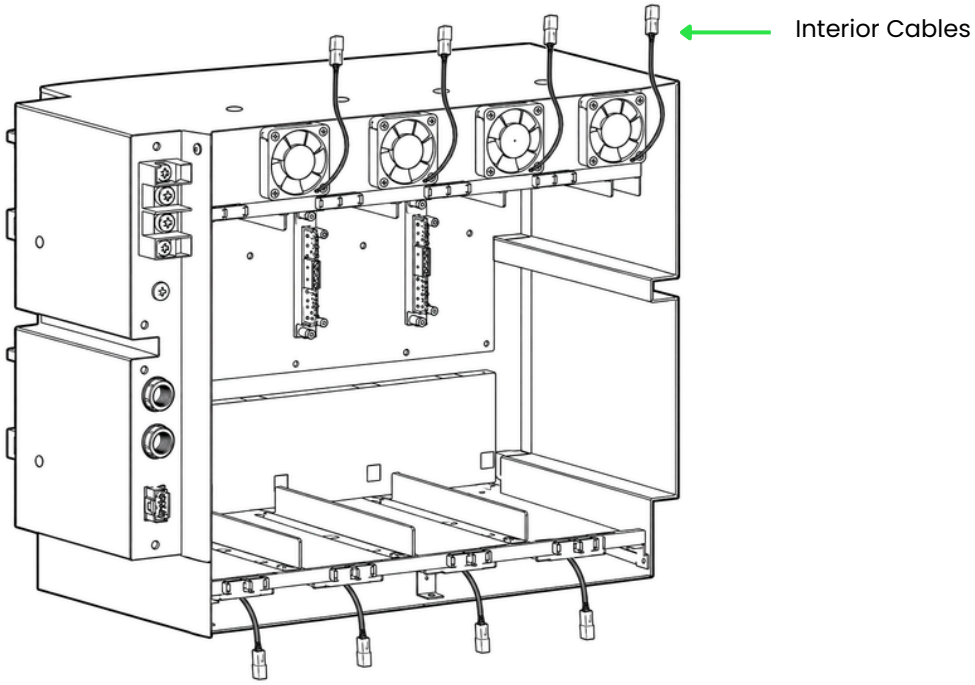

Inverter Box

2. Install inverters in their slots **from left to right.**
3. The Inverter Box will come with one handle. This handle attaches to the outer edge of each Inverter Module for easier installation and removal. This handle must be removed before installing the Enclosure Cover and can be stored in the open space provided to the right of the fourth inverter slot.



Removeable Handle

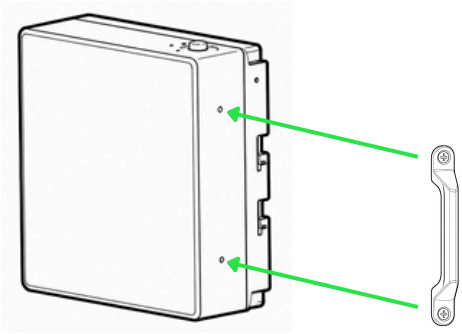

Attach Handle to Remove Inverter Module

4. When removing an Inverter Module, secure the Inverter Box and the remaining Inverter Modules by placing your free hand against the Inverter Box before pulling firmly on the handled inverter to remove it from its slot.

Connect Fan Cables

1. The Inverter Box has fan cables on the top and bottom of each slide path. Each Inverter Module has two wires coming out of the top: A long wire and a short wire. Connect the cables to the corresponding matching cable pigtail on each Inverter Module. You can route these cables over the front of the Inverter Module, or along the side.

Note: When routing and tucking the wires at top of the inverter, be sure to avoid contact between the cables and the blades of the cooling fans.

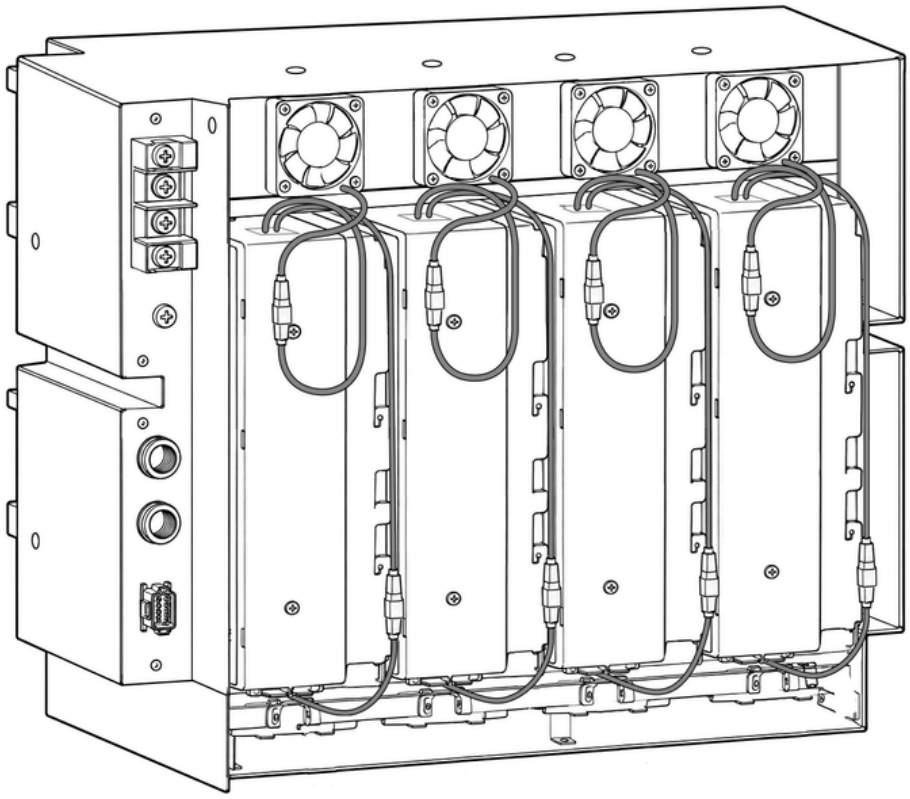

Inverter Modules Connected

2. When disconnecting cables in the Inverter Box, pull the connector housing, not the wires. Use a small screwdriver to release the locking mechanism to disconnect the cables.

CAUTION

Caution: Pulling the wires may result in damage to the cables.

6.11 Wi-Fi Antenna

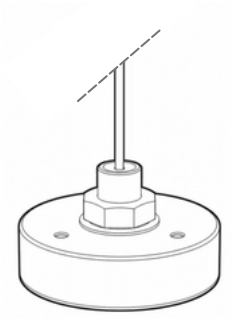

Wi-Fi Antenna

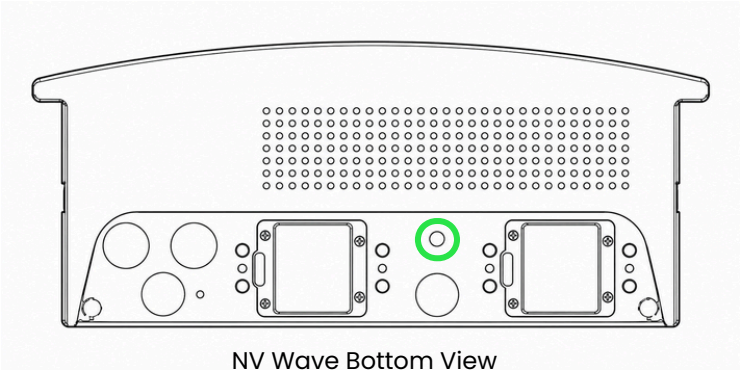

NV Wave Bottom View
Showing Wi-Fi Antenna Position

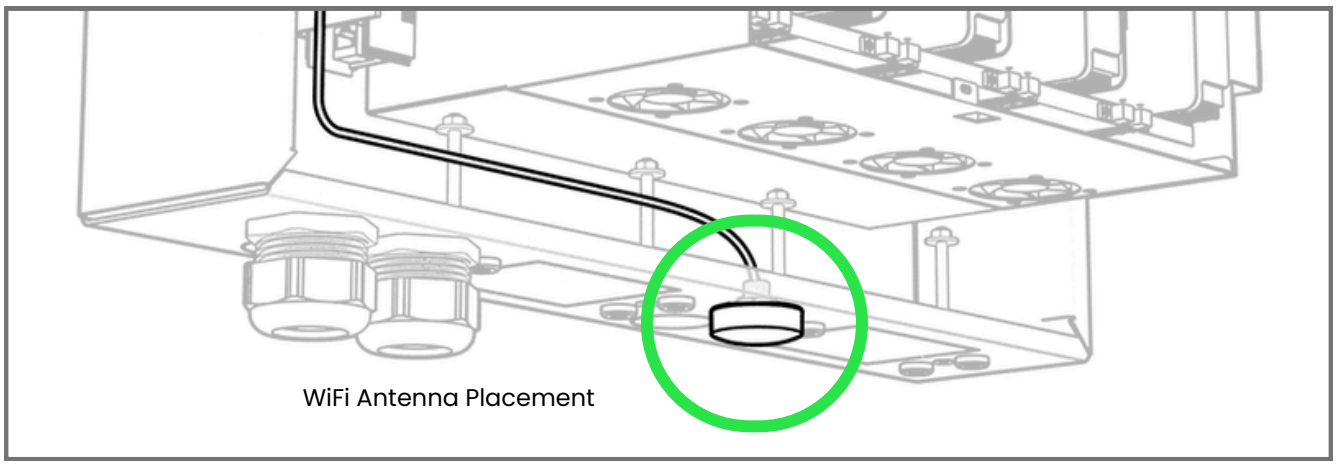

The Wi-Fi Antenna is installed at the bottom of the enclosure between the AC Breaker locations. The Wi-Fi Antenna will be shipped with the Inverter Box.

1. Install the Wi-Fi Antenna by removing the cover of the adhesive tape at the back side of the antenna and inserting the threaded stud through the provided hole.
2. Secure the antenna with the provided threaded nut.

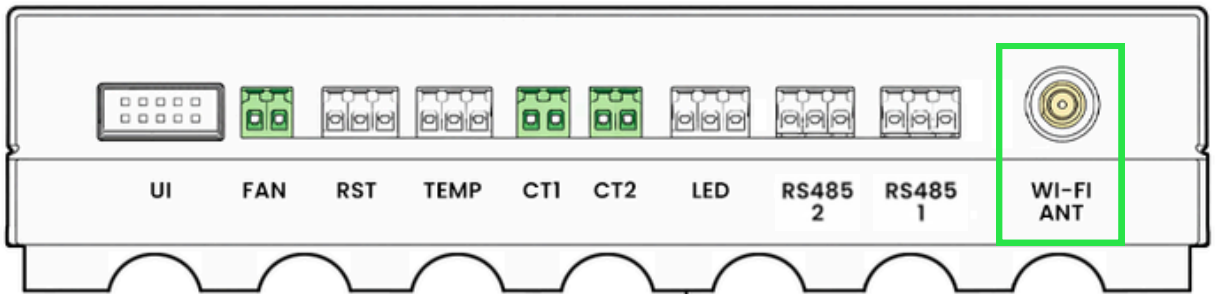

6.12 TPR Interconnection

Use the 1-1/4 in conduit opening for the TPR interconnection.

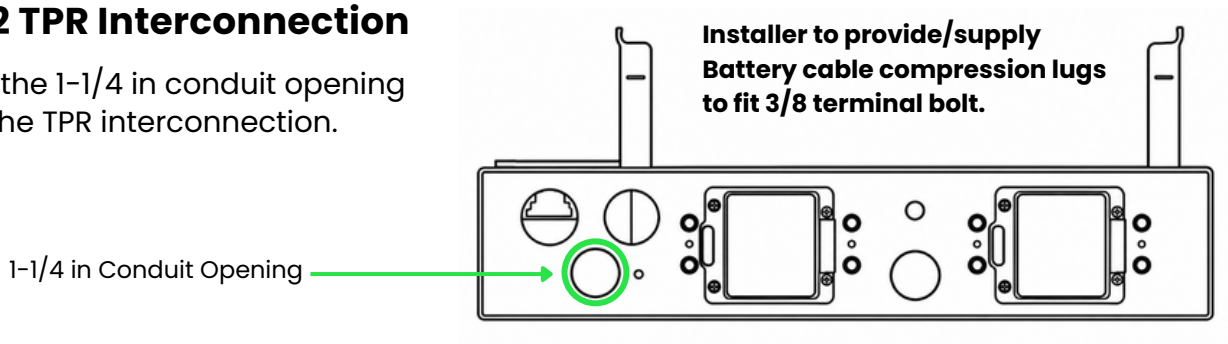

NV Wave Bottom View with Cover Removed

1. Connect each TPR Power Interconnection using #2/0 AWG battery copper cables for positive and negative connections.

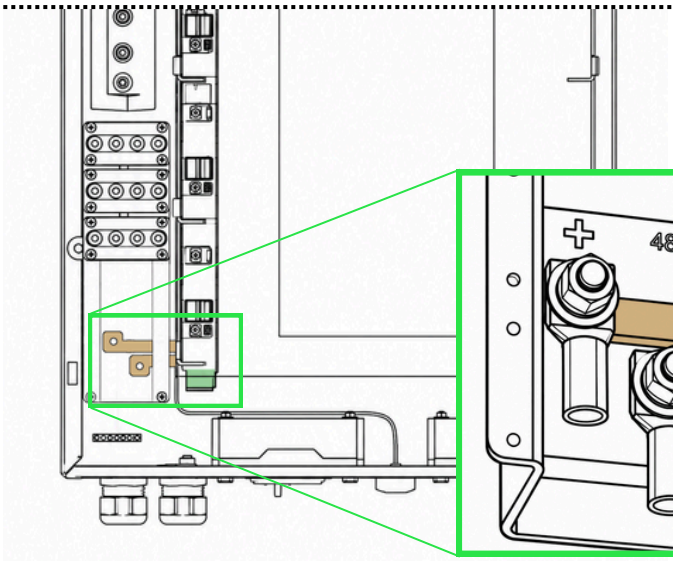

*Battery cable lugs to be supplied by installer.

TPR Power Interconnection

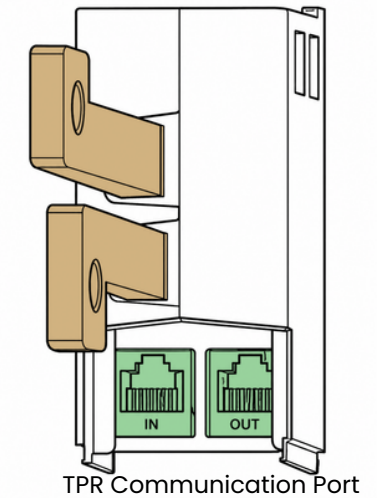

TPR Communication Port Side View

2. Interconnect the communication cables using a CAT5 or CAT6 cable. When installing three enclosures, connect the second Expansion Cabinet OUT port to the IN port of the first Expansion Cabinet.

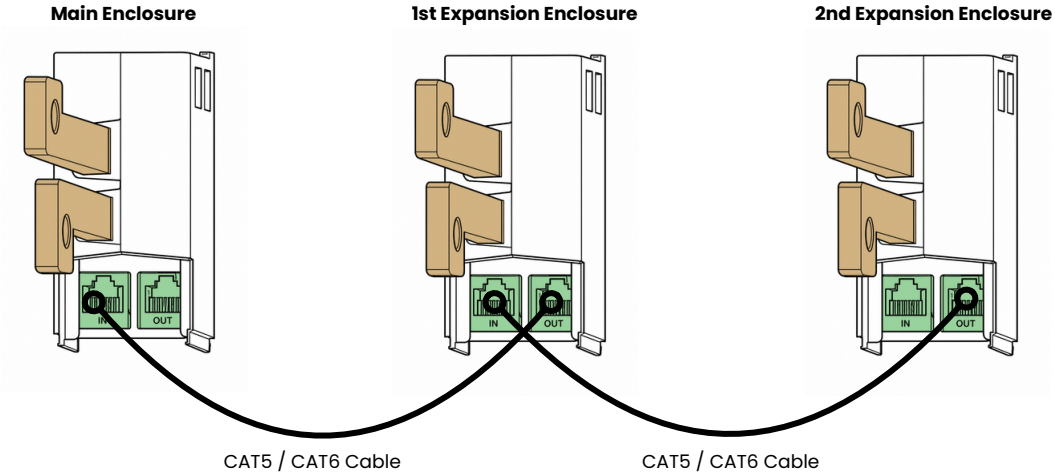

3. Connect a #6AWG equipment ground.

6.13 Function Button Installation

The NV Wave Function Button is shipped with the AController Box. The Function Button is only installed at the Main Enclosure (enclosure with inverters).

1. Remove the rubber plug on the left side of the enclosure cover and install the Function Button. The Function Button plugs into the UI port on the AController.

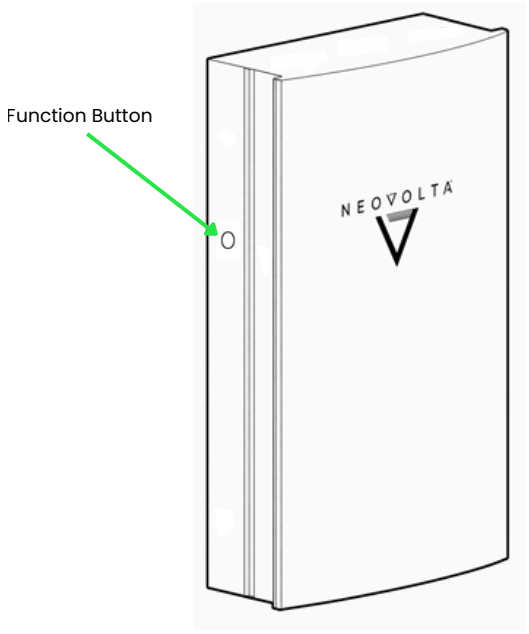

NV Wave Enclosure

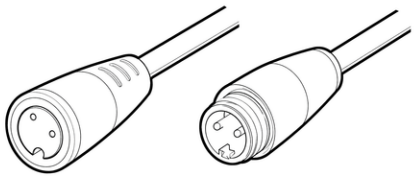

2-pin Connector (male / female)
for LED strips

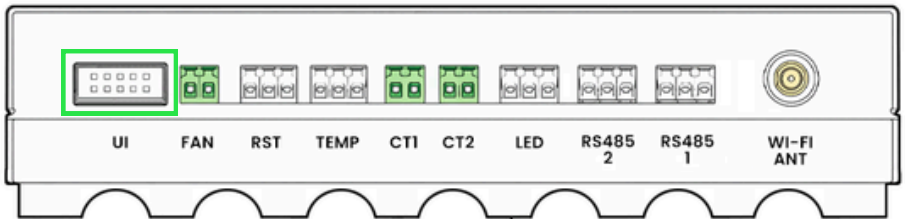

AController Top View

6.14 LED Connection

The LED connection cables are pre-made 3-pin cables with orange connectors.

Connect the two orange 3-pin connectors to the LED Light Strip connectors inside the enclosure cover.

The other ends of the LED Wire Harness Plugs into the LED port of the AController.

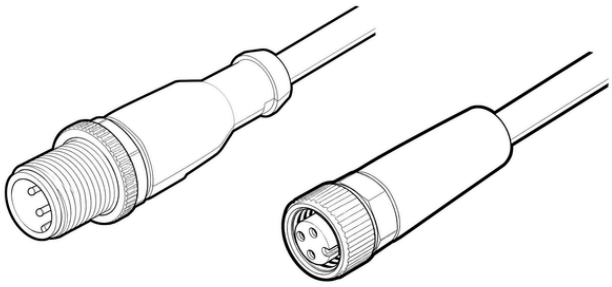

3-pin Connector (male / female)
for LED strips

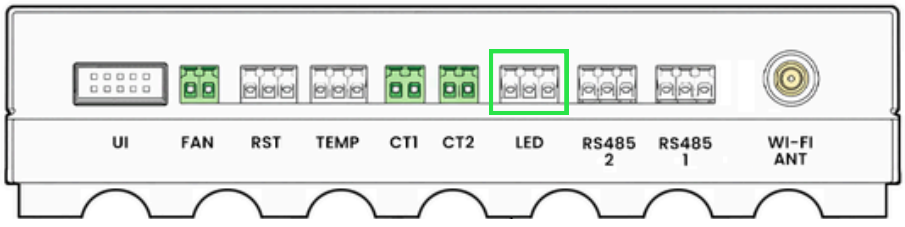

AController Top View

6.15 Battery Installation

The Battery Modules are installed in the open compartment above the Inverter Box. Install Batteries with labeling facing out. Battery connections are on the left side.

Important Notes:

- Install batteries from bottom to top.
- Additional Battery Modules may be added to an existing installation up to 18 months after the initial installation date.

---

1. Handle each Battery Module by the hole grips on each side.
2. Install each battery by placing them on the “fin” shelves on each side, sliding each battery approximately 2/3 of the way into its slot.
3. Check that the Battery Module side grooves are aligned with the shelf.
4. Continue to slide the battery until you hear a “click”; this click is the Battery Module securing into place.
5. Confirm visually that these switches are locked and perform a gentle pull test to ensure that the Battery Module is installed securely.

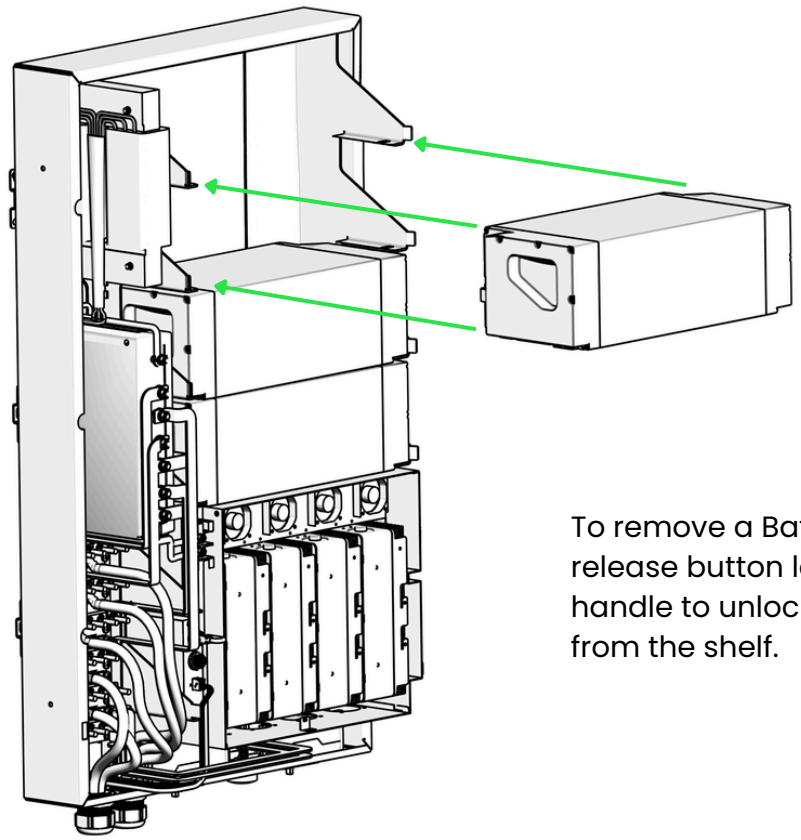

To remove a Battery Module, press the release button located inside each battery handle to unlock or disengage the battery from the shelf.

6.16 Front Cover Installation

1. To install the Front Cover, align the Cover with the Enclosure Base, and slide gently over the Enclosure.

2. The Front Cover is aligned properly with the enclosure when the screw holes on both sides line up with the corresponding holes on the enclosure. There are two holes on each side of the cover and enclosure.

3. Apply even pressure when firmly securing the cover to the enclosure to ensure it forms a secure seal, protecting the internal components from the environment.

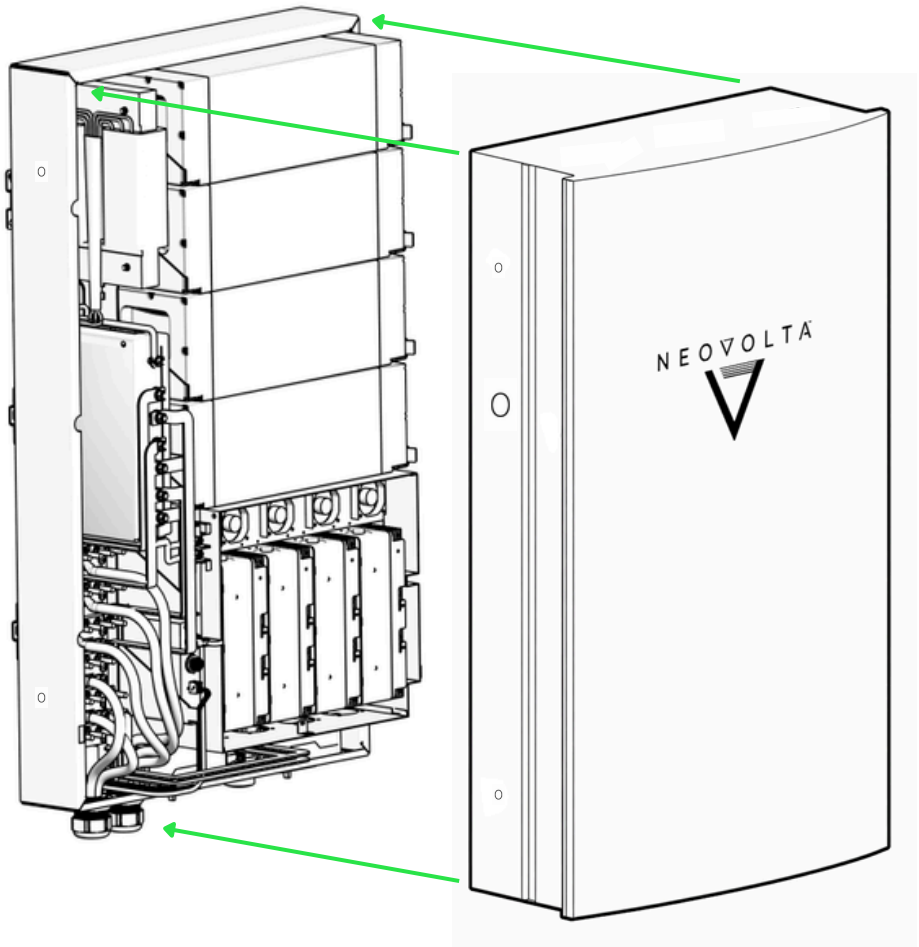

6.17 NV Wave Name Plate Installation

Important Note: This name plate sticker ships with the AController and contains the AController serial number; you must attach and fill out this sticker in all NV Wave installations.

1. Affix the NV Wave Name Plate Sticker to the left, outer side of the enclosure cover. This sticker is shipped with the AController.

2. Before attaching the NV Wave System label, clean and dry the area so it is free of dirt and oil.

3. After applying the label, use a permanent marker to mark an "X" next to the model number of the NV Wave model installed. Each model number represents a configuration that can be installed.

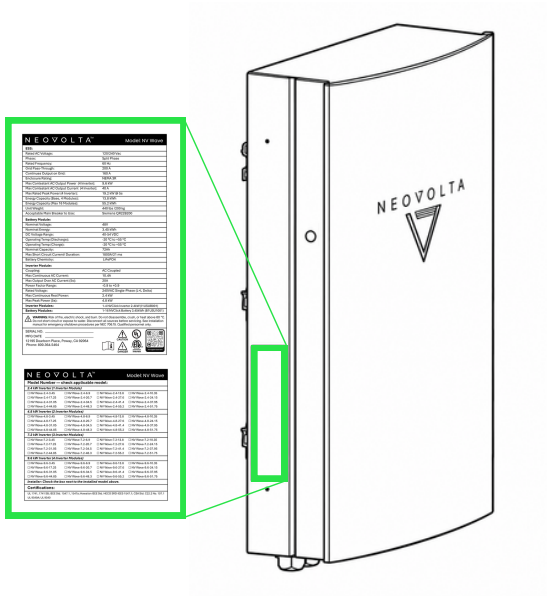

NEOVOLTA™	Model: NV Wave
ESS:	
Rated AC Voltage:	120/240 Vac
Phase:	Split Phase
Rated Frequency:	60 Hz
Grid Pass-Through:	200 A
Continues Output on Grid:	160 A
Enclosure Rating:	NEMA 3R
Max Contestant AC Output Power (4 Inverter):	9.6 kW
Max Contestant AC Output Current (4 Inverter):	40 A
Max Rated Peak Power (4 Inverter):	19.2 kW @ 5s
Energy Capacity (Base, 4 Modules):	13.8 kWh
Energy Capacity (Max 16 Modules):	55.2 kWh
Unit Weight:	440 lbs /200 kg
Acceptable Main Breaker to Use:	Siemens QR22B200
Battery Module:	
Nominal Voltage:	48V
Nominal Energy:	3.45 kWh
DC Voltage Range:	40-54 VDC
Operating Temp (Discharge):	-20 °C to +55 °C
Operating Temp (Charge):	-20 °C to +55 °C
Nominal Capacity:	72Ah
Max Short Circuit Current/ Duration:	1800A/21 ms
Battery Chemistry:	LiFePO4
Inverter Module:	
Coupling:	AC Coupled
Max Continuous AC Current:	10.4A
Max Output Over AC Current (5s):	20A
Power Factor Range:	-0.9 to +0.9
Rated Voltage:	240VAC Single-Phase (L+L Delta)
Max Continuous Real Power:	2.4 kW
Max Peak Power (5s):	4.8 kW
Inverter Modules:	1-4 NVClick Inverter 2.4kW (I1USUB001)
Battery Modules:	1-16 NVClick Battery 3.45kWh (B1USU1001)

WARNING: Risk of fire, electric shock, and burn. Do not disassemble, crush, or heat above 60 °C. Do not short circuit or expose to water. Disconnect all sources before servicing. See installation manual for emergency shutdown procedures per NEC 706.15. Qualified personnel only.

SERIAL NO. _____
MFG DATE _____
12195 Dearborn Place, Poway, CA 92064
Phone: 800.364.5464

CAUTION DANGER Intertek

NV Wave Name Plate Sticker

NEOVOLTA™	Model: NV Wave		
Model Number — check applicable model:			
2.4 kW Inverter (1 Inverter Module)			
☐ NV Wave-2.4-3.45	☐ NV Wave-2.4-6.9	☐ NV Wave-2.4-13.8	☐ NV Wave-2.4-10.35
☐ NV Wave-2.4-17.25	☐ NV Wave-2.4-20.7	☐ NV Wave-2.4-27.6	☐ NV Wave-2.4-24.15
☐ NV Wave-2.4-31.05	☐ NV Wave-2.4-34.5	☐ NV Wave-2.4-41.4	☐ NV Wave-2.4-37.95
☐ NV Wave-2.4-44.85	☐ NV Wave-2.4-48.3	☐ NV Wave-2.4-55.2	☐ NV Wave-2.4-51.75
4.8 kW Inverter (2 Inverter Modules)			
☐ NV Wave-4.8-3.45	☐ NV Wave-4.8-6.9	☐ NV Wave-4.8-13.8	☐ NV Wave-4.8-10.35
☐ NV Wave-4.8-17.25	☐ NV Wave-4.8-20.7	☐ NV Wave-4.8-27.6	☐ NV Wave-4.8-24.15
☐ NV Wave-4.8-31.05	☐ NV Wave-4.8-34.5	☐ NV Wave-4.8-41.4	☐ NV Wave-4.8-37.95
☐ NV Wave-4.8-44.85	☐ NV Wave-4.8-48.3	☐ NV Wave-4.8-55.2	☐ NV Wave-4.8-51.75
7.2 kW Inverter (3 Inverter Modules)			
☐ NV Wave-7.2-3.45	☐ NV Wave-7.2-6.9	☐ NV Wave-7.2-13.8	☐ NV Wave-7.2-10.35
☐ NV Wave-7.2-17.25	☐ NV Wave-7.2-20.7	☐ NV Wave-7.2-27.6	☐ NV Wave-7.2-24.15
☐ NV Wave-7.2-31.05	☐ NV Wave-7.2-34.5	☐ NV Wave-7.2-41.4	☐ NV Wave-7.2-37.95
☐ NV Wave-7.2-44.85	☐ NV Wave-7.2-48.3	☐ NV Wave-7.2-55.2	☐ NV Wave-7.2-51.75
9.6 kW Inverter (4 Inverter Modules)			
☐ NV Wave-9.6-3.45	☐ NV Wave-9.6-6.9	☐ NV Wave-9.6-13.8	☐ NV Wave-9.6-10.35
☐ NV Wave-9.6-17.25	☐ NV Wave-9.6-20.7	☐ NV Wave-9.6-27.6	☐ NV Wave-9.6-24.15
☐ NV Wave-9.6-31.05	☐ NV Wave-9.6-34.5	☐ NV Wave-9.6-41.4	☐ NV Wave-9.6-37.95
☐ NV Wave-9.6-44.85	☐ NV Wave-9.6-48.3	☐ NV Wave-9.6-55.2	☐ NV Wave-9.6-51.75
Installer: Check the box next to the installed model above.			
Certifications:			
UL 1741, 1741 SB; IEEE Std. 1547.1, 1547a; Hawaiian IEEE Std. HECO SRD-IEEE-1547.1; CSA Std. C22.2 No. 107.1 UL 9540A; UL 9540			

NV Wave System Label

6.18 System Output Options

Use the tables below to see the system configurations available for the desired output of the NV Wave ESS.

Locate the model number marked on the NV Wave System Label, then confirm the inverter module count, battery module count, and number of enclosures match the equipment installed.

NV Wave Model Number Naming

The model number of the configuration installed is created by including the Inverter Output and the Battery Storage of the installation. For example: NVWave-X-Y where X = Inverter Output (kW) and Y = Battery Storage (kWh).

Configuration Color Key

1 Enclosure (Main unit only)	**2 Enclosures** (Main + 1 battery enclosure)	**3 Enclosures** (Main + 2 battery enclosures)

NV Wave-2.4 — 1 Inverter Module (2.4 kW)

Model Number	Inv. Mod.	Inv. kW	Batt. Mod.	Total kWh	Enc-losures	Enc. 1 Batt.	Enc. 2 Batt.	Enc. 3 Batt.
NVWave-2.4-3.45	1	2.4 kW	1	3.45 kWh	1	1	--	--
NVWave-2.4-6.9	1	2.4 kW	2	6.9 kWh	1	2	--	--
NVWave-2.4-10.35	1	2.4 kW	3	10.35 kWh	1	3	--	--
NVWave-2.4-13.8	1	2.4 kW	4	13.8 kWh	1	4	--	--
NVWave-2.4-17.25	1	2.4 kW	5	17.25 kWh	2	4	1	--
NVWave-2.4-20.7	1	2.4 kW	6	20.7 kWh	2	4	2	--
NVWave-2.4-24.15	1	2.4 kW	7	24.15 kWh	2	4	3	--
NVWave-2.4-27.6	1	2.4 kW	8	27.6 kWh	2	4	4	--
NVWave-2.4-31.05	1	2.4 kW	9	31.05 kWh	2	4	5	--
NVWave-2.4-34.5	1	2.4 kW	10	34.5 kWh	2	4	6	--
NVWave-2.4-37.95	1	2.4 kW	11	37.95 kWh	3	4	6	1
NVWave-2.4-41.4	1	2.4 kW	12	41.4 kWh	3	4	6	2
NVWave-2.4-44.85	1	2.4 kW	13	44.85 kWh	3	4	6	3
NVWave-2.4-48.3	1	2.4 kW	14	48.3 kWh	3	4	6	4
NVWave-2.4-51.75	1	2.4 kW	15	51.75 kWh	3	4	6	5
NVWave-2.4-55.2	1	2.4 kW	16	55.2 kWh	3	4	6	6

NV Wave-4.8 — 2 Inverter Modules (4.8 kW)

Model Number	Inv. Mod.	Inv. kW	Batt. Mod.	Total kWh	Enc-losures	Enc. 1 Batt.	Enc. 2 Batt.	Enc. 3 Batt.
NVWave-4.8-3.45	2	4.8 kW	1	3.45 kWh	1	1	--	--
NVWave-4.8-6.9	2	4.8 kW	2	6.9 kWh	1	2	--	--
NVWave-4.8-10.35	2	4.8 kW	3	10.35 kWh	1	3	--	--
NVWave-4.8-13.8	2	4.8 kW	4	13.8 kWh	1	4	--	--
NVWave-4.8-17.25	2	4.8 kW	5	17.25 kWh	2	4	1	--
NVWave-4.8-20.7	2	4.8 kW	6	20.7 kWh	2	4	2	--
NVWave-4.8-24.15	2	4.8 kW	7	24.15 kWh	2	4	3	--
NVWave-4.8-27.6	2	4.8 kW	8	27.6 kWh	2	4	4	--
NVWave-4.8-31.05	2	4.8 kW	9	31.05 kWh	2	4	5	--
NVWave-4.8-34.5	2	4.8 kW	10	34.5 kWh	2	4	6	--
NVWave-4.8-37.95	2	4.8 kW	11	37.95 kWh	3	4	6	1
NVWave-4.8-41.4	2	4.8 kW	12	41.4 kWh	3	4	6	2
NVWave-4.8-44.85	2	4.8 kW	13	44.85 kWh	3	4	6	3
NVWave-4.8-48.3	2	4.8 kW	14	48.3 kWh	3	4	6	4
NVWave-4.8-51.75	2	4.8 kW	15	51.75 kWh	3	4	6	5
NVWave-4.8-55.2	2	4.8 kW	16	55.2 kWh	3	4	6	6

1 Enclosure (Main unit only)	**2 Enclosures** (Main + 1 battery enclosure)	**3 Enclosures** (Main + 2 battery enclosures)

NV Wave-7.2 — 3 Inverter Modules (7.2 kW)

Model Number	Inv. Mod.	Inv. kW	Batt. Mod.	Total kWh	Enc-losures	Enc. 1 Batt.	Enc. 2 Batt.	Enc. 3 Batt.
NVWave-7.2-3.45	3	7.2 kW	1	3.45 kWh	1	1	--	--
NVWave-7.2-6.9	3	7.2 kW	2	6.9 kWh	1	2	--	--
NVWave-7.2-10.35	3	7.2 kW	3	10.35 kWh	1	3	--	--
NVWave-7.2-13.8	3	7.2 kW	4	13.8 kWh	1	4	--	--
NVWave-7.2-17.25	3	7.2 kW	5	17.25 kWh	2	4	1	--
NVWave-7.2-20.7	3	7.2 kW	6	20.7 kWh	2	4	2	--
NVWave-7.2-24.15	3	7.2 kW	7	24.15 kWh	2	4	3	--
NVWave-7.2-27.6	3	7.2 kW	8	27.6 kWh	2	4	4	--
NVWave-7.2-31.05	3	7.2 kW	9	31.05 kWh	2	4	5	--
NVWave-7.2-34.5	3	7.2 kW	10	34.5 kWh	2	4	6	--
NVWave-7.2-37.95	3	7.2 kW	11	37.95 kWh	3	4	6	1
NVWave-7.2-41.4	3	7.2 kW	12	41.4 kWh	3	4	6	2
NVWave-7.2-44.85	3	7.2 kW	13	44.85 kWh	3	4	6	3
NVWave-7.2-48.3	3	7.2 kW	14	48.3 kWh	3	4	6	4
NVWave-7.2-51.75	3	7.2 kW	15	51.75 kWh	3	4	6	5
NVWave-7.2-55.2	3	7.2 kW	16	55.2 kWh	3	4	6	6

1 Enclosure (Main unit only)	**2 Enclosures** (Main + 1 battery enclosure)	**3 Enclosures** (Main + 2 battery enclosures)

NV Wave-9.6 — 4 Inverter Modules (9.6 kW)

Model Number	Inv. Mod.	Inv. kW	Batt. Mod.	Total kWh	Enc-losures	Enc. 1 Batt.	Enc. 2 Batt.	Enc. 3 Batt.
NVWave-9.6-3.45	4	9.6 kW	1	3.45 kWh	1	1	--	--
NVWave-9.6-6.9	4	9.6 kW	2	6.9 kWh	1	2	--	--
NVWave-9.6-10.35	4	9.6 kW	3	10.35 kWh	1	3	--	--
NVWave-9.6-13.8	4	9.6 kW	4	13.8 kWh	1	4	--	--
NVWave-9.6-17.25	4	9.6 kW	5	17.25 kWh	2	4	1	--
NVWave-9.6-20.7	4	9.6 kW	6	20.7 kWh	2	4	2	--
NVWave-9.6-24.15	4	9.6 kW	7	24.15 kWh	2	4	3	--
NVWave-9.6-27.6	4	9.6 kW	8	27.6 kWh	2	4	4	--
NVWave-9.6-31.05	4	9.6 kW	9	31.05 kWh	2	4	5	--
NVWave-9.6-34.5	4	9.6 kW	10	34.5 kWh	2	4	6	--
NVWave-9.6-37.95	4	9.6 kW	11	37.95 kWh	3	4	6	1
NVWave-9.6-41.4	4	9.6 kW	12	41.4 kWh	3	4	6	2
NVWave-9.6-44.85	4	9.6 kW	13	44.85 kWh	3	4	6	3
NVWave-9.6-48.3	4	9.6 kW	14	48.3 kWh	3	4	6	4
NVWave-9.6-51.75	4	9.6 kW	15	51.75 kWh	3	4	6	5
NVWave-9.6-55.2	4	9.6 kW	16	55.2 kWh	3	4	6	6

1 Enclosure (Main unit only)	**2 Enclosures** (Main + 1 battery enclosure)	**3 Enclosures** (Main + 2 battery enclosures)

6.19 Expansion Enclosure(s)

NV Wave Battery Expansion Enclosure Installation and Connection:

Note: The NV Wave Battery Expansion Enclosure uses the same Encolsure Base as the main unit. Install this enclosure by following the steps outlined for the main unit.

To interconnect the battery and communication from the Main Unit to any Expansion Enclosures, first interconnect the TPRs of each enclosure.

1. Locate the 1-1/4 in KO opening at the bottom of the enclosure and remove it.
2. Use #2/0 AWG battery copper cables for positive and negative connections.
3. Install a #6AWG equipment ground and install a shielded CAT5E or CAT6 communication cable for the BMS interconnection.

For a reliable, stable connection, the recommendation is to keep the connections between TPRs as short as possible, no longer than 10 feet (3.05 m)

The following expansion enclosure configurations are possible:

Option 1: Single Expansion Enclosure

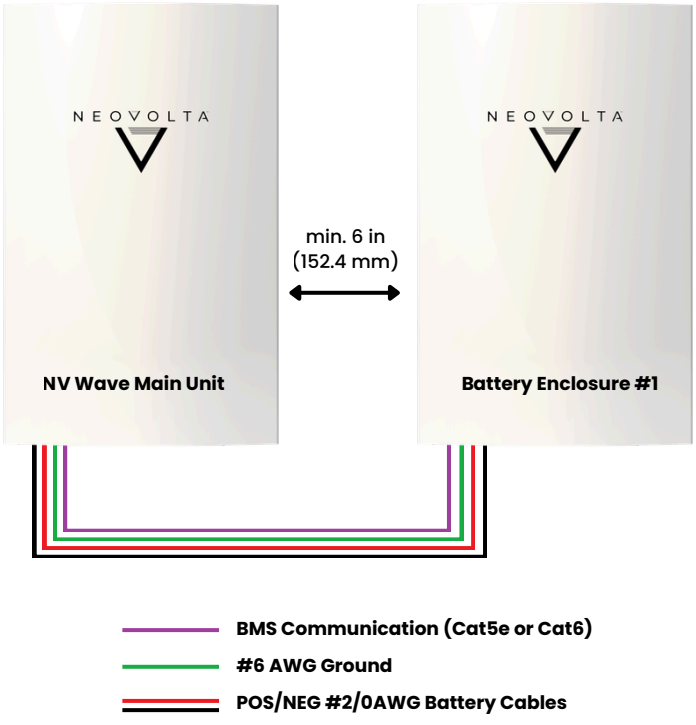

Option 2: Expansion Enclosures Are Located to the Left of the Main Unit

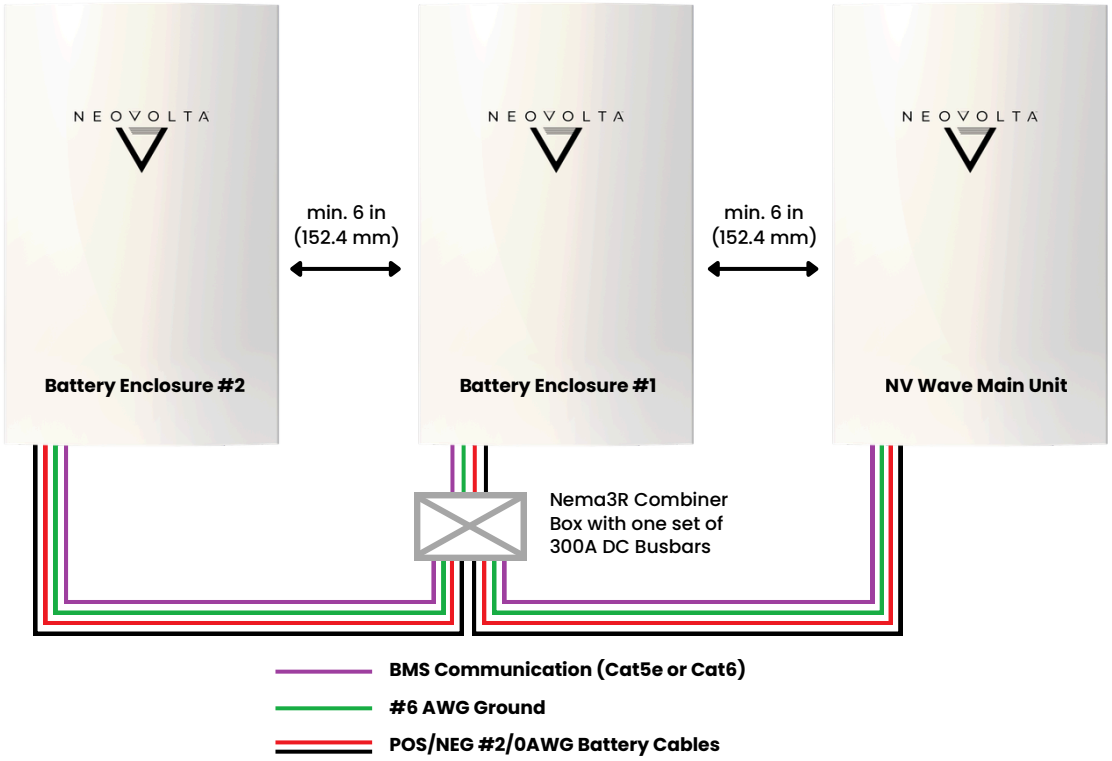

Option 3: Expansion Enclosures Are Located to the Right of the Main Unit

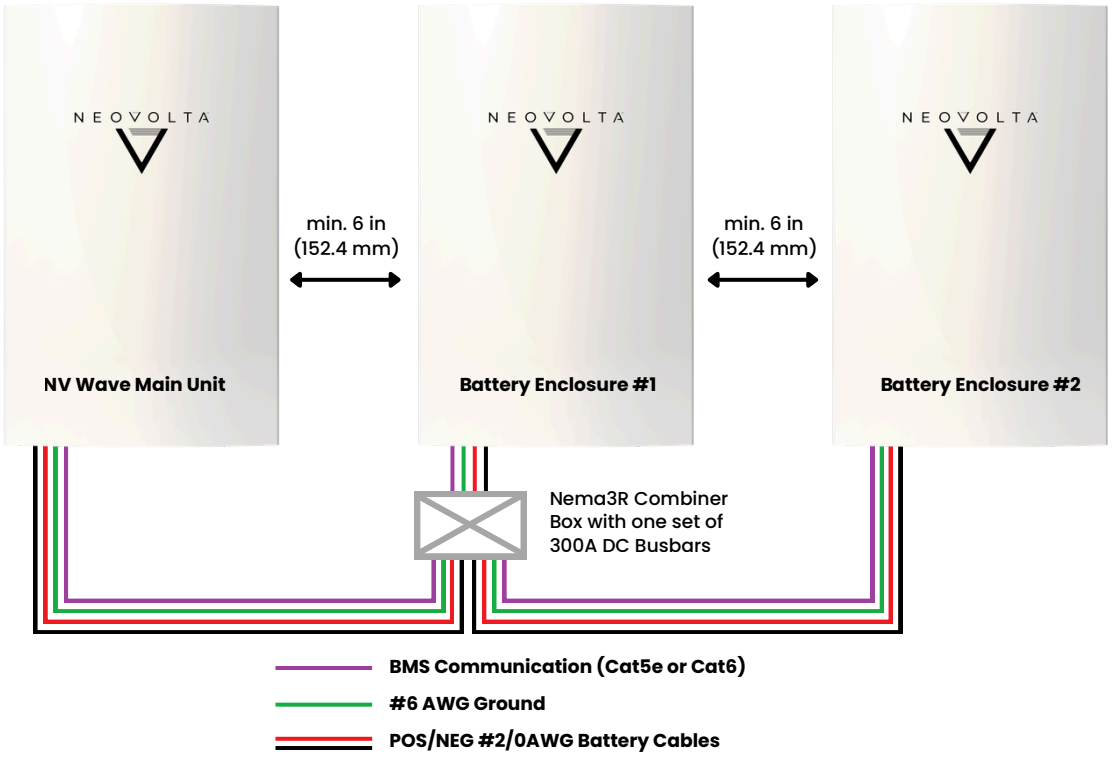

7. Whole-Home Backup

7.1 Wiring Whole-Home Backup Configuration

In this configuration, the AC-Solar connection is made in the Main Service Panel (MSP).

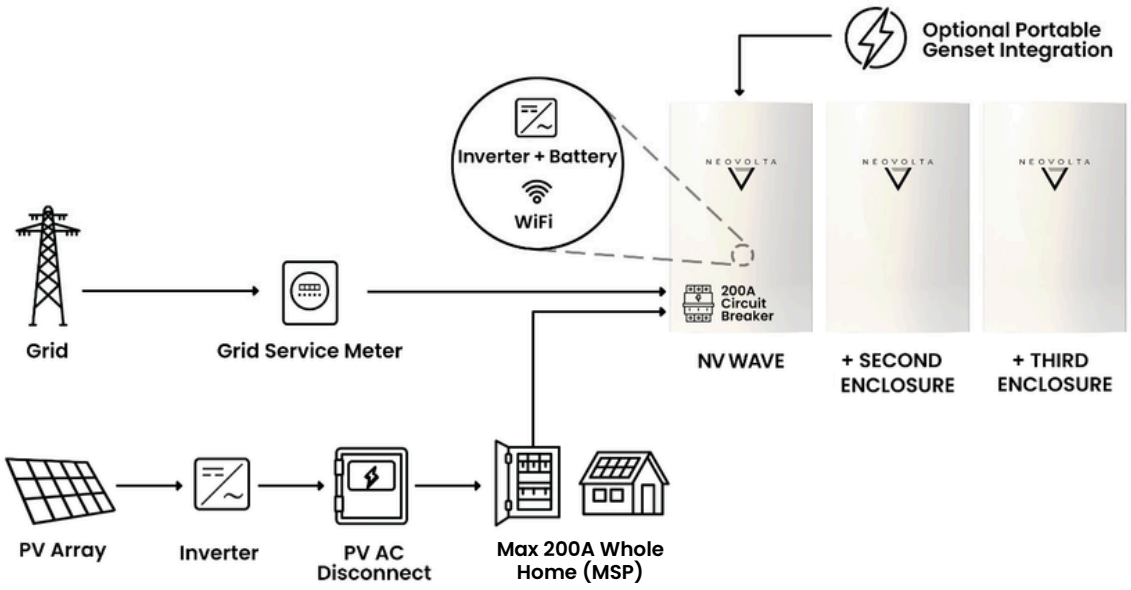

In this configuration, the AC-Solar connection is made through a line side tap ahead of the MSP.

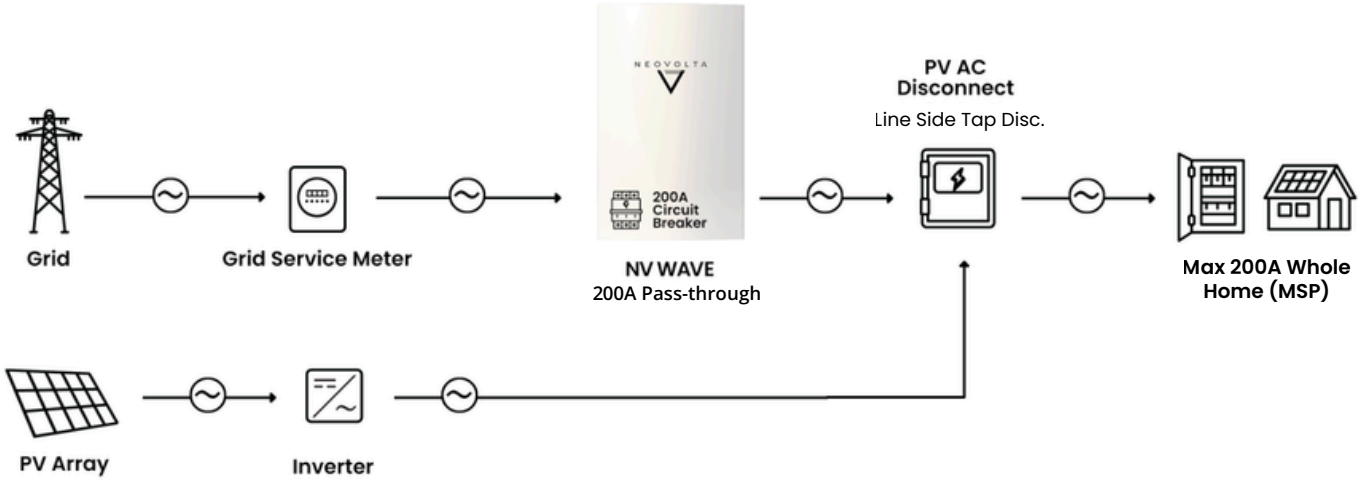

The full-service ampacity passes through the NV Wave to the MSP. During a grid outage, the NV Wave isolates itself by opening the grid relays. The system then immediately transitions into microgrid mode, providing backup power to the entire home.

The AC-Solar System remains operational, and the NV Wave uses frequency-watt control to curtail AC-Solar Output when necessary, to match the house loads and battery charging.

7.2 Load Management in Backup Mode

Any load source connected to the NV Wave will be monitored and controlled by the system. The AController, the "brain" of the NV Wave, continuously monitors the backup load, as well as whole home consumption, in real time.

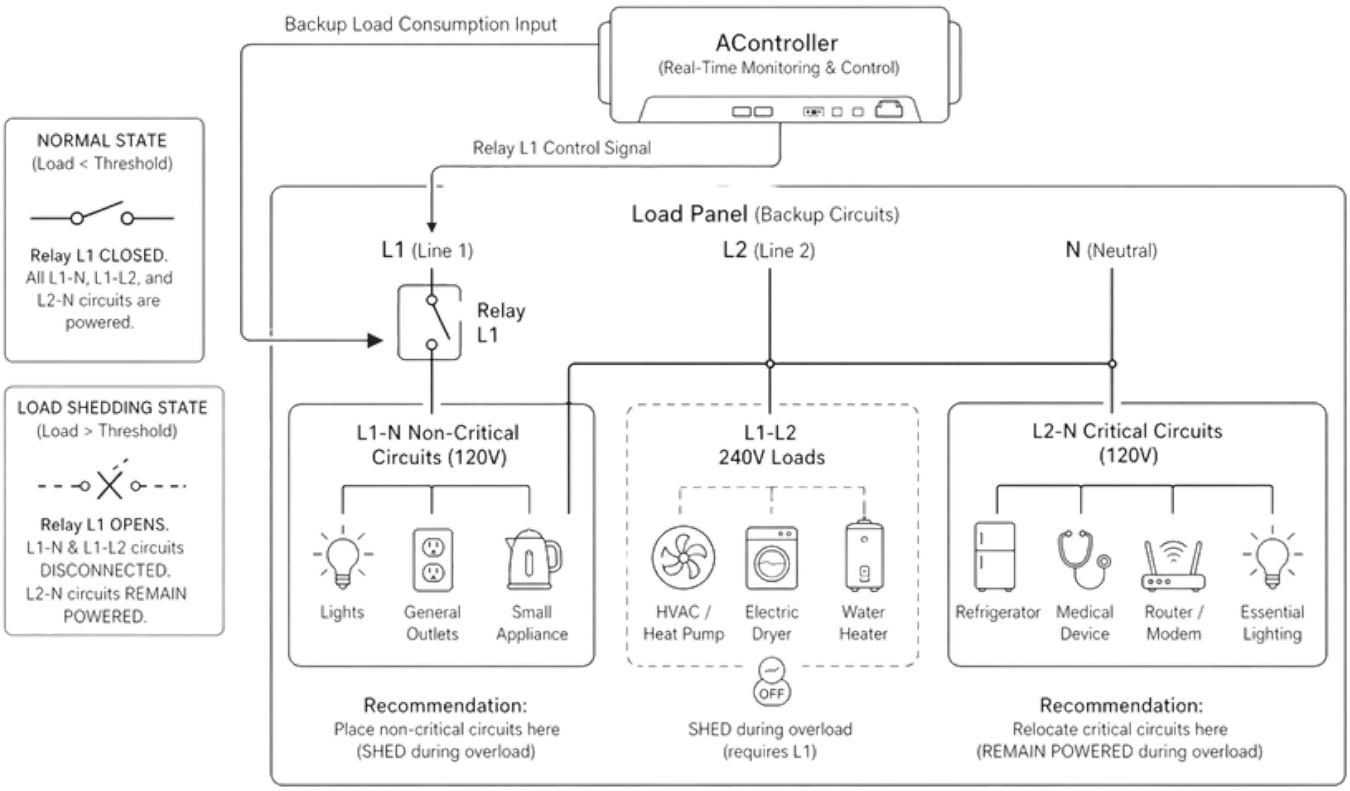

1. If the total continuous load exceeds the threshold, the AController will open relay **L1** on the load output.
2. When this occurs, all **240V loads, L1-L2,** are disconnected and will stop consuming power.
3. Additionally, any **120V circuits** connected to **L1-N** in the load panel will also be shut off.
4. All circuits connected to **L2-N** will remain powered by the system.
5. Once the total backup load decreases and falls below the configured threshold, the AController will re-close **L1**, restoring both **240V to L1-L2** and **120V** power to **L1-N circuits**.

8. Grounding and Bonding



Warning: Do not use aluminum conductors for equipment grounding.

Equipment Grounding (EGC)

All metallic Enclosure components must be bonded to the Equipment Grounding Conductor (EGC) in accordance with NEC Article 250 and NEC 706.

- Connect the EGC to the dedicated ground lug inside the NV Wave Enclosure.
- Maintain a continuous, unbroken grounding path from the NV Wave back to the MSP.
- Verify the grounding electrode conductor (GEC) connection at the main panel has not been interrupted.
- The NV Wave enclosure ground lug accepts up to 4 AWG copper conductor.
- Torque Value: To 3.5–4.0 N·m (35 lb-in)



Note: Verify bonding configuration with the Authority Having Jurisdiction (AHJ) before energizing the system.

Neutral-Ground Bonding

The neutral-ground bond for the system must occur at one point only.

- If the NV Wave is installed as a service entrance equipment (with the optional, maximum 200A main breaker), the neutral-ground bond is made at the NV Wave. The downstream load panel must have its neutral-ground bond removed or must be configured as a subpanel (floating neutral).
- If the NV Wave is installed as a load-side system (no main breaker, feeding downstream from an existing MSP), the neutral-ground bond remains at the main service panel. Do not create a second bond at the NV Wave.

DC Grounding

The NV Wave battery system operates on an isolated DC bus.

- Do NOT connect the DC negative terminal to the AC system ground.
- Do NOT ground the DC bus at any point within the enclosure.
- Maintain full isolation between the AC and DC systems at all times.

Grounding Electrode Conductor (GEC) Sizing Reference

Verify with NEC Table 250.66 and local code amendments. Consult AHJ for final sizing requirements.



WARNING — Grounding Verification:
Improper grounding or a second neutral-ground bond in a subpanel configuration can result in objectionable neutral current, equipment damage, or lethal shock hazard. Verify bonding configuration with the AHJ before energizing the system.

System Service Rating	Minimum GEC Size (Copper)
100A	8 AWG
125A	8 AWG
150A	6 AWG
200A	4 AWG

9. System Settings

9.1 System Commissioning

Note: Complete all items in the table below before applying power to the NV Wave system.



Warning: Do not proceed to commissioning if any item cannot be confirmed.

Pre-Commissioning Verification Checklist

#	Checklist Item	✓
1	All AC and DC wiring connections are landed and torqued to specified values	☐
2	Grid main breaker is in the OFF position	☐
3	All battery modules are fully seated and click-locked onto their shelves	☐
4	All inverter modules are fully seated in their slots, installed left to right	☐
5	Inverter handle has been removed from inverter and stored	☐
6	AController is secured and all terminal connections confirmed	☐
7	Ensure communication cable is connected securely from Inverter Box to AController	☐
8	TPR interconnection complete (if expansion enclosures are installed)	☐
9	Wi-Fi antenna installed and coax cable connected to AController WI-FI ANT port	☐
10	Function Button installed and connected to UI port on AController	☐
11	LED connection cables connected to AController LED port	☐
12	Auto Transformer installed and TR harness connected (optional, for Whole-Home Backup only)	☐
13	Temperature sensor connected to TEMP port on AController (optional, for Whole-House Backup only)	☐
14	Front cover installed and secured; sealing plugs installed in all unused holes	☐
15	Minimum clearances verified: 6 in sides, 24 in top, 18 in bottom, 36 in front	☐
16	No tools, materials, or personnel within the clearance zone	☐
17	Vent openings on the sides of the unit are clear of all obstructions	☐
18	Customer Wi-Fi SSID and password confirmed and available	☐



Note: Retain this checklist as part of the installation record. Some Authorities Having Jurisdiction (AHJ) may request documentation of commissioning verification.



With all items above confirmed, proceed to the following steps.

9.2 Applying Power

Before applying power to the NV Wave system:

- Verify all connections are secure and properly torqued
- Ensure area is clear of personnel and tools



WARNING: Ensure the required overhead clearance for the Emergency Venting Area is maintained and kept clear.

- Close the main circuit breaker to energize system
- The NV Wave AController will automatically detect and initialize components
- Verify system status LEDs indicate normal operation

9.2.1 On/Off Cycle

The Function Button is located on left side of the enclosure.

1. Turn on the Grid supply to the NV Wave.
2. Press the Function Button for approximately 1-2 seconds. The NV Wave will display blue
3. flashing LED lights, indicating that the unit is in the Initial State.
   Press the Function Button a second time. The unit's LED lights will display a solid blue light as the NV Wave is in Battery Discovery Mode.
4. After the NV Wave completes Battery Discovery, the unit will display a solid green light, indicating it is in Grid Mode, i.e. normal operation.
5. To turn off the NV Wave, press and hold the Function Button for 10 seconds; you will hear a click and the LED lights will turn off, indicating that the unit is off.

9.2.2 Grid Outage Test

After powering the NV Wave enclosures on and achieving normal function, you must simulate a grid outage.

1. Turn off the Grid connection to the inverter. Within 2 seconds, the system's LED lights will turn pink, indicating it's in backup mode.
2. If the system does not enter backup mode upon disconnecting from the Grid, perform a Reboot Sequence.

If you see red flashing lights while performing a Grid Outage Test, perform this test again to ensure the system will enter Backup Mode if the Grid connection is interrupted.

9.2.3 Reboot Sequence

1. Push and hold the Function Button for 10 seconds. You will hear a click, and all LED lights will go off. The unit is powered off when no LED lights show.
2. Power the unit back on by pushing the Function Button once. The LEDs will flash in blue, indicating the system is in standby mode.
3. Press the Function Button again to achieve a solid green light to indicate the system is functioning normally.

9.3 NV Connect

1. Navigate to the NV Connect site and login:

   portal.neovolta.com

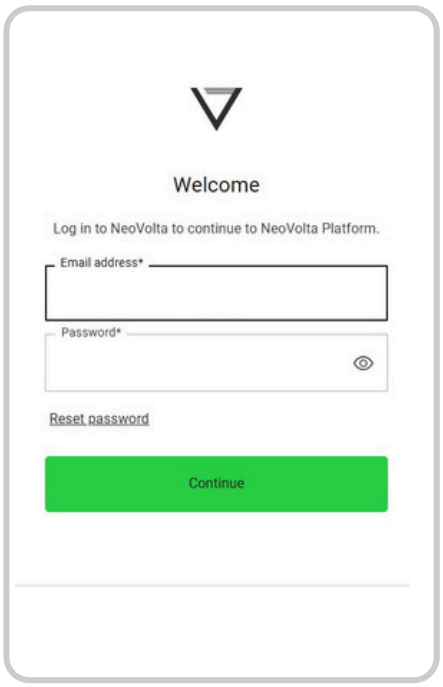

2. Click "Create Site" to set up the homeowner's site.

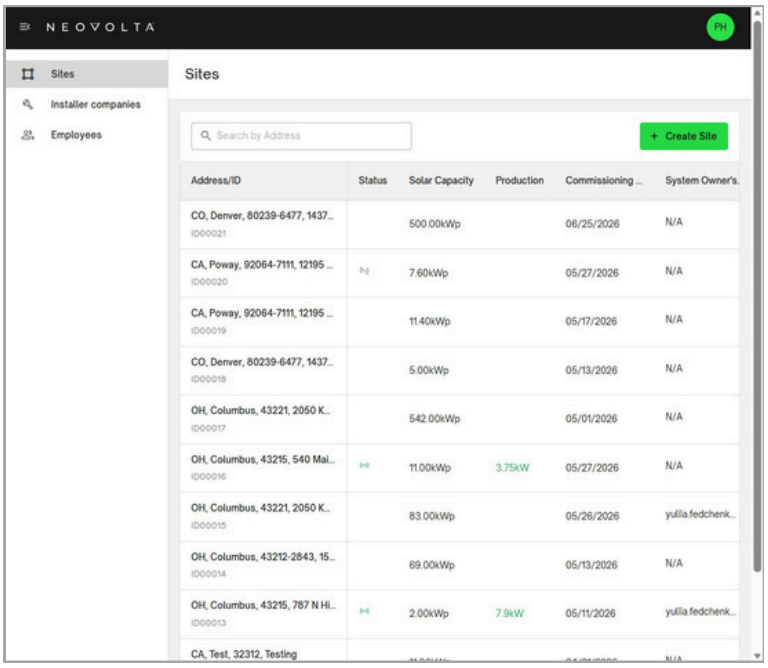

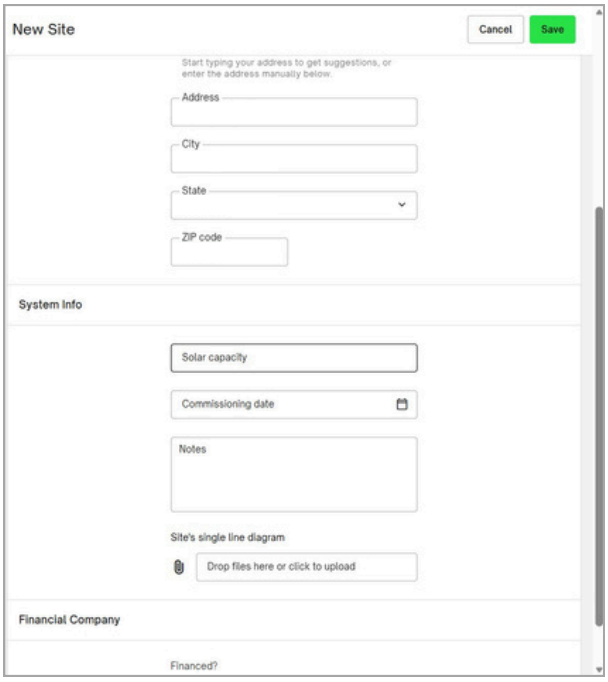

3. Enter basic information.
   Use the drop-down menus to input the correct time zone and installer company. Enter the homeowner's address and confirm.

4. Enter the solar capacity and date of commissioning for the homeowner's system.

5. Confirm financing by answering the question about the system's financing at the bottom of the screen. Attach any diagrams applicable (uploads are not required).

6. Click Save.

   With these steps complete, the homeowner's newly installed NV Wave system can be monitored via mobile by the homeowner and NeoVolta.

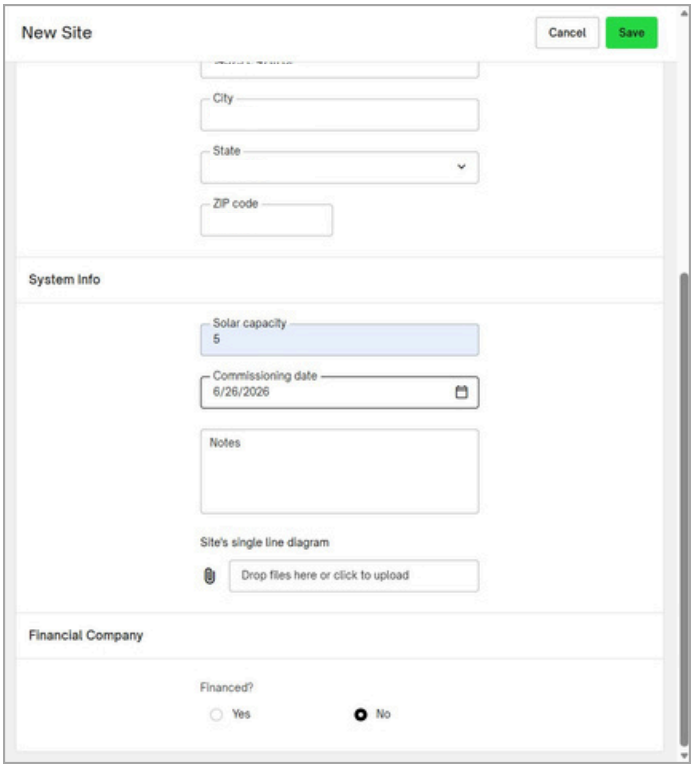

Before registering the NV Wave with our online platform NV Connect, confirm the following:

- ☐ You have a phone or tablet available
- ☐ Cellular data is enabled on the mobile device
- ☐ The customer's Wi-Fi network name (SSID) is known
- ☐ The customer's Wi-Fi Password is available

Once confirmed, proceed with the following steps:

1. Apply power to the NV Wave. If there is no blue flashing light, then press the Function Button once to initiate standby mode.

2. Open the Settings on your phone and turn on Cellular Data. This prevents your phone from automatically disconnecting from the NV Wave access point when internet access is unavailable.

3. Select Wi-Fi.

4. Connect to the NV Wave access point.
   The SSID typically appears as, "NEOV-000001."

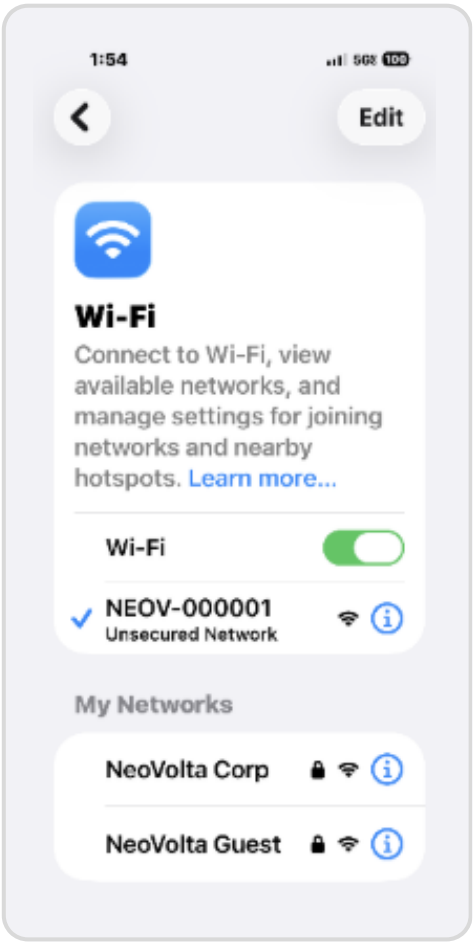

Note: If the network is not visible, verify that power is applied, the LED is flashing and blue, and try refreshing the Wi-Fi list.

6. Open your device's web browser and input this IP address: 192.168.4.1 then tap Enter. You will reach the Initial Setup page. (Note: This page will not load if you have a VPN enabled.)

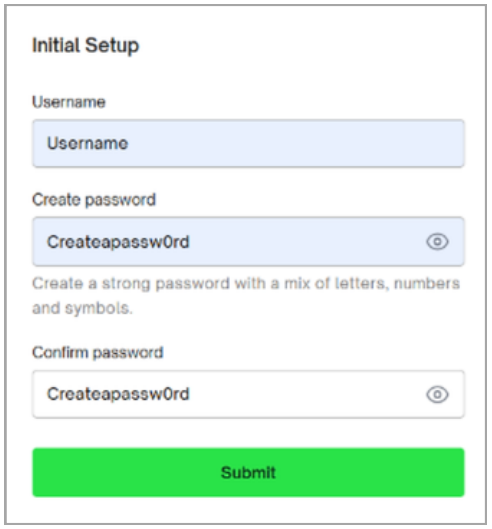

7. Create a Username and Password.

   Your password must be a minimum of 8 characters, and include one letter and one number.

8. After registering, you will see a "Setup Complete!" screen.

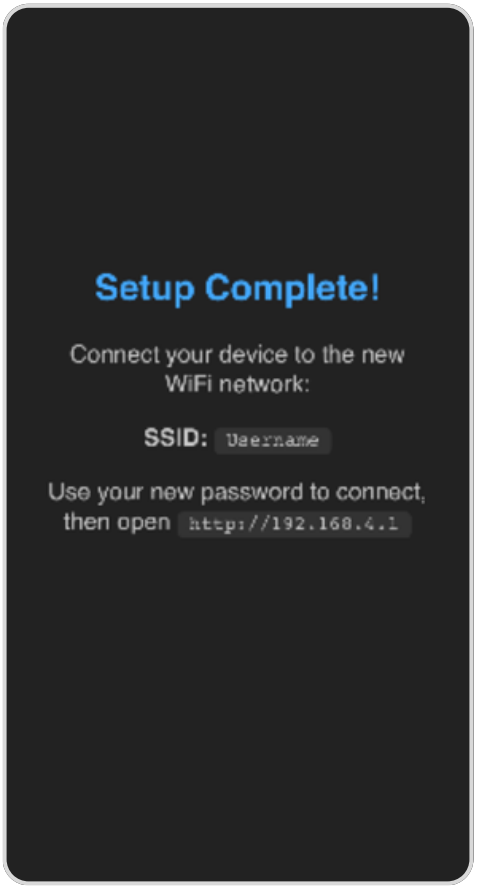

9. Return to your device's Wi-Fi settings. Select the Wi-Fi network that matches the Username you just created.

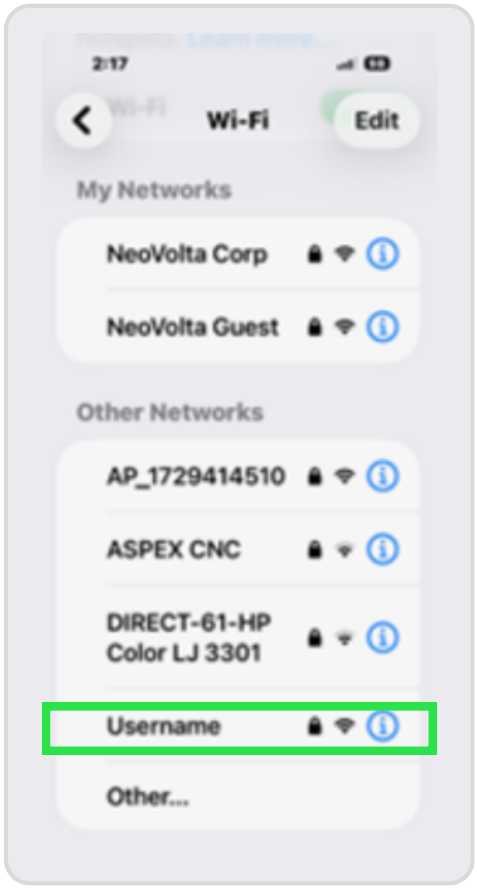

10. Enter the password you just created, and tap Enter. Wait for the connection to be established. Next to the network name, the words, “No Internet Connection”, will be visible.

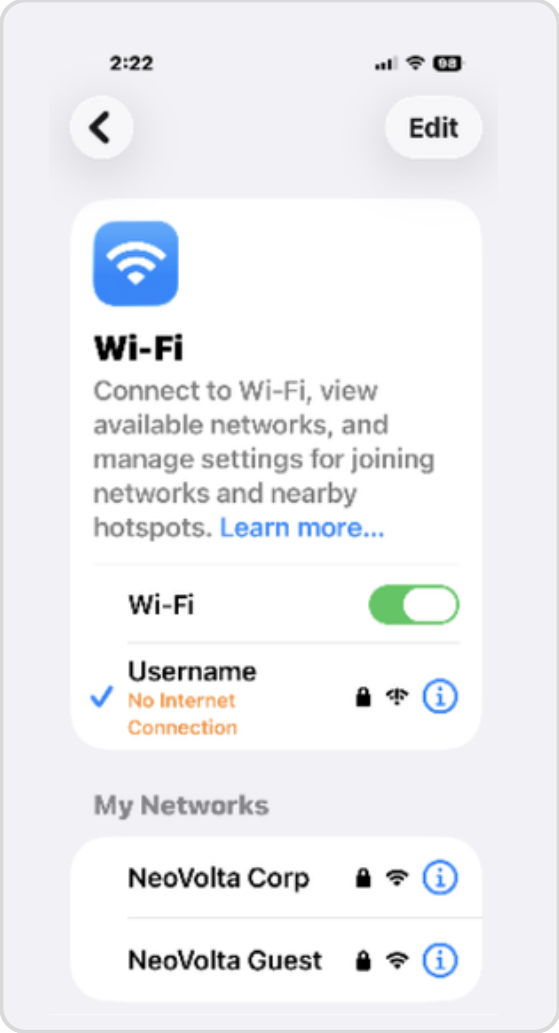

11. Open your phone’s browser and enter the IP address: 192.168.4.1 This will bring you to the “Authorization required” page.

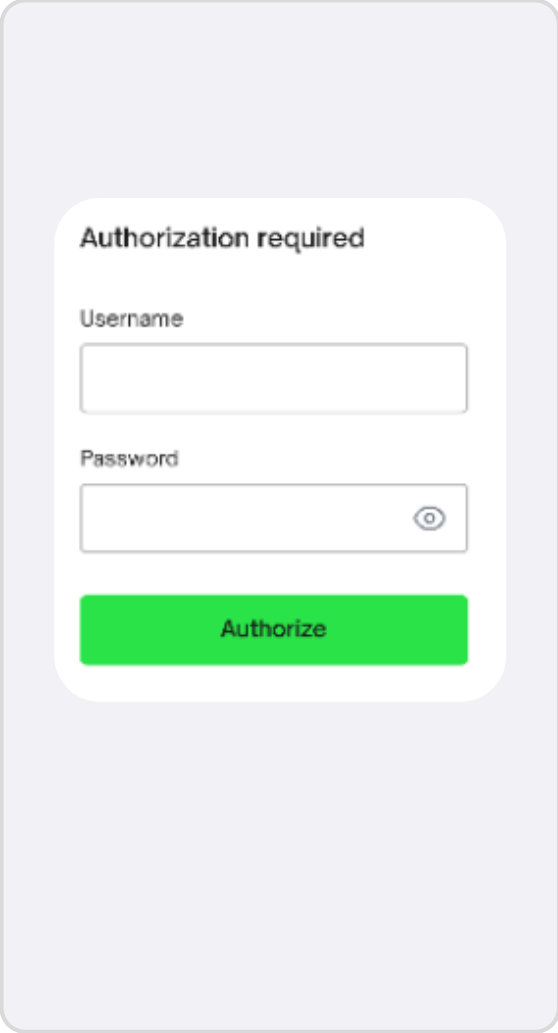

12. Enter the new Username and Password you just created and tap Enter. his will bring you to the NeoVolta Wi-Fi page.

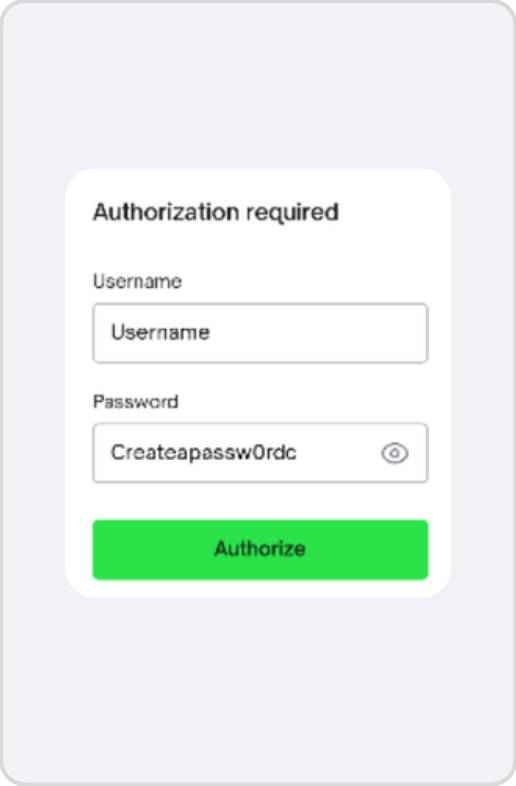

13. Enter the Customer's Wi-Fi SSID (network name) and Wi-Fi password as shown below.

SSID - SmithHomeWiFi
Password - XXXX$XX5

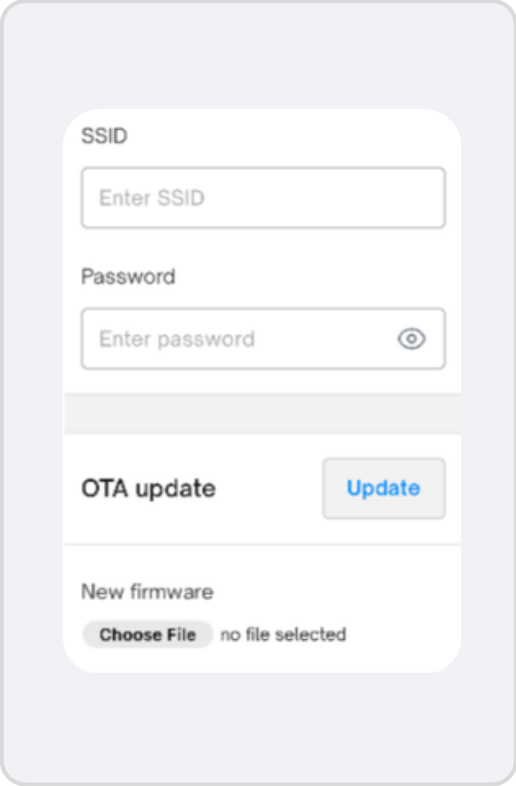

Note: SSID and Passwords are case-sensitive. Be sure to enter them exactly as provided by the customer.

Inputting incorrect credentials will prevent the NV Wave from being able to connect to the internet, disrupting the commissioning process.

When finished, select "Apply", then wait 30-60 seconds. This gives the system a chance to save these credentials.

---

14. You will now see the, “Wi-Fi Credentials Saved” screen.

15. Troubleshooting Steps:

    - **If you cannot see NEOV-XXXXXX**, check the Grid power, check the Battery power, and confirm that the LED is blue and flashing.

    - **If you cannot access 192.168.4.1**, confirm that the NV Wave is connected to the network, check your browser cache, and confirm that any VPNs are disabled.

    - **If your setup is complete but the customer’s NV Wave system is not reporting**, check for the correct SSID, and confirm you have entered the password correctly. Confirm that the customer’s Wi-Fi capacity is at least 2.4GHz and that the internet service is active.

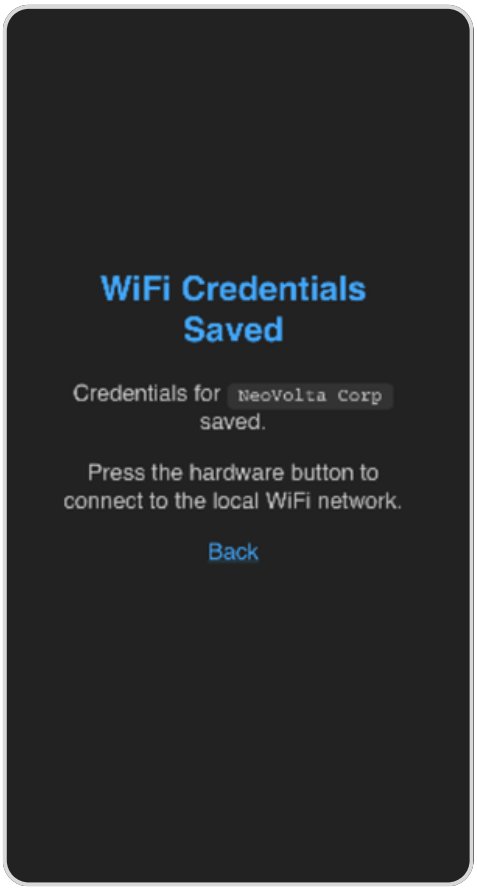

9.4 How the Homeowner Monitors Their System via NV Connect

During the commissioning of your NV Wave, you must add the email address of the homeowner to their site on the NV Connect platform. This will initiate an invite email to the homeowner from the NV Connect platform.

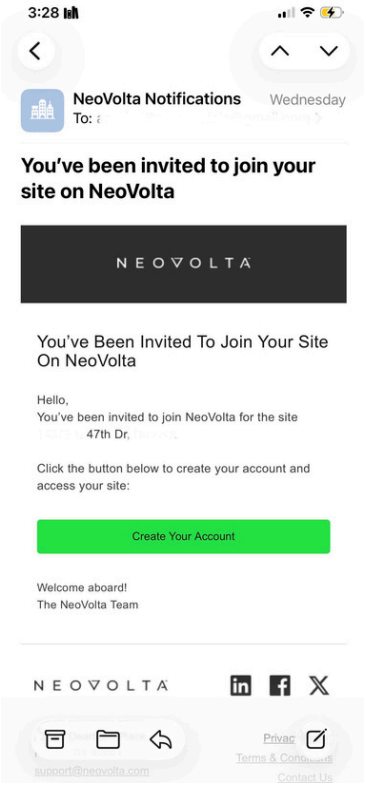

1. Instruct the homeowner to click on "Create Your Account."

2. Advise the homeowner to keep track of the password credentials they set as they will need to sign in before you finish commissioning.

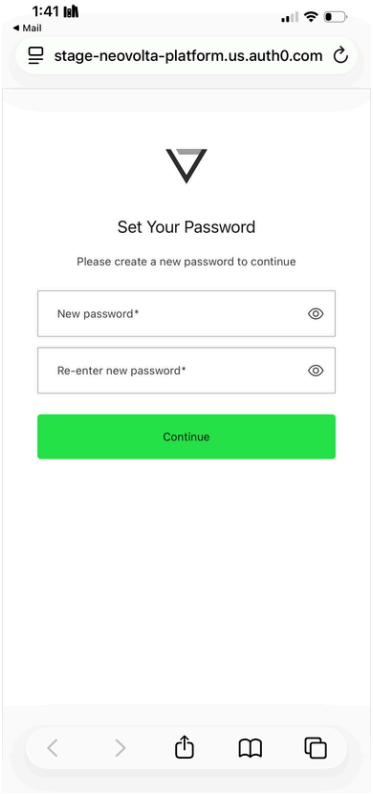

3. Confirm that the homeowner's dashboard shows their address and system. **The homeowner can now monitor their system using NV Connect.**

9.5 LED Indication States

The NV Wave LED Strip has 4 status indications that correspond to the following states:

1. **STANDBY State:** The LED strip is blinking BLUE at a frequency of 1 second.
2. **GRID Mode:** The LED strip is displaying a solid, static GREEN color.
3. **BACKUP Mode:** The LED strip is displaying a solid, static PINK color.
4. **FAULT State:** The LED strip is blinking RED at a frequency of 1 second.

9.6 LED Indication Patterns

System State	LED Color and Pattern
Standby State	Blue LED Color Flashing at 1 Hz
Standby State (during battery discovery)	Blue LED Color Constant
Grid Mode	Green LED Color Constant
Back-Up Mode	Pink LED Color Constant
Fault State	RED LED Color Constant
Reset to Default	White LED Color 3 Flashes
Wi-Fi Connection Success	No Change in Indication
Wi-Fi Connection Failed	3 Flashes of Current State Color Every 20 sec.
E-Stop State	Yellow LED color flashing