NEOVOLTA

Hybrid Inverter & 16kWh Battery

NV16KAC & NVPLUS-16

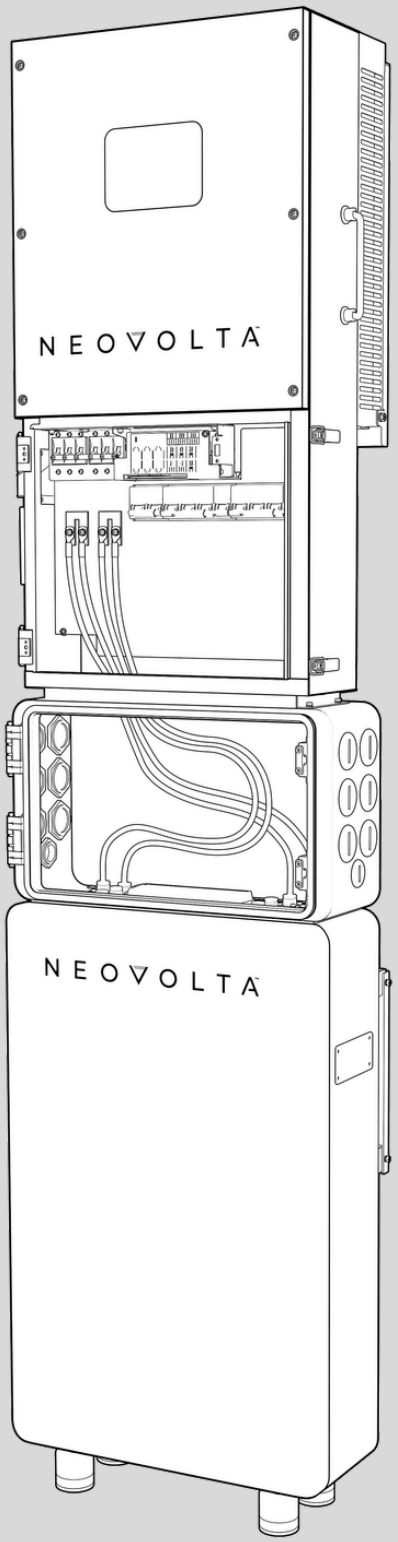

Quick Installation Manual

For support scan here

800.364.5464

NEOVOLTA.COM

V3.11092026

I. Pre-Installation Preparation

Safety Warnings

- **Installation must be performed by qualified personnel**. Read all relevant manuals before starting.
- **Ensure power is OFF** before installation. Disconnect batteries, PV modules, and AC power.
- **Avoid battery short circuits**. Verify polarity when connecting batteries.
- **Comply with local electrical codes** for safe and legal installation.
- Keep at least 6 in (152.4 mm) between batteries.
- Supplied power cables are for battery-to-inverter only. Battery-to-battery cables are made on site with the supplied Amphenol SurLok Plus connectors.

Required Tools & Equipment

- NVPlus-16 Battery
- NV16KAC Hybrid Inverter
- Screwdrivers, Wrenches, Spirit Level, Dolly, and other tools
- UL-listed 1 AWG battery cable suitable for the application, for battery-to-battery connections (4 cables per additional battery; length determined by the installer)

Compliance Notice

The NV16KAC Hybrid Inverter is designed for use as the Power Conversion Equipment (PCE) in a DC Energy Storage System (DC ESS) as defined under UL 9540, Third Edition. In accordance with Clause 46.14, this section of the installation manual constitutes the required manufacturer for documentation establishing valid and compliant battery system compatibility. The NV16KAC must only be paired with the NVPlus-16 and NVPlus-16-H no other.

In accordance with UL 9540 Third Edition Clause 46.14, this section of the installation manual constitutes the required manufacturer documentation establishing a valid and compliant DC ESS pairing. The following sections define the requirements that must be met for this combination to remain within the scope of the UL 9540 Third Edition DC ESS listing:

Validated Compatible Inverter Model

Parameter	Value
Brand	Neovolta
Model	NV16KAC
Inverter certification	UL 1741 SA / SB · IEEE 1547-2018 · Certificate No. SGSNA/25/GZ/00313
ARM firmware version	1.0706 (230205)
DSP firmware version	1.0806 (100011)
HMI firmware version	1.0301 (3.09)
Interoperability test report	FM-RD-DQA-014-017 Rev A01 · Renon Technology (Shenzhen) Co., Ltd. · 2026-04-30
Test summary	35 tests · 34 PASS · 1 N/A (inverter-side forced charging not applicable to NV16KAC)

Disclaimer: The information provided herein is correct to the best of NeoVolta's knowledge, is presented in good faith and believed to be correct at the time of printing. No liability for any errors, facts or opinions is accepted. In no event will NeoVolta be responsible for damages of any nature whatsoever resulting from the use of or reliance upon information from this specification sheet or the products to which the information refers. All weights and measures shown are best approximations.

Electrical Interface Requirements

Parameter	Specification
Battery chemistry	LiFePO4 (Lithium Iron Phosphate)
Rated battery voltage	51.2 V DC (nominal)
Battery voltage operating range	40 V – 58 V DC
Charge cutoff voltage	56.8 V (CAN frame 0x351)
Maximum charging current	157 A (BMS-requested; CAN frame 0x351)
Maximum discharging current	190 A (BMS-requested; CAN frame 0x351)

Communication and Control Interface Requirements

Interface Parameter	Required Setting / Specification
Communication method	CAN bus (primary) / RS-485 (secondary)
CAN protocol	REVO series low-voltage battery BMS communication protocol V1.03
CAN baud rate	500 kbps (data bit time: 2.00 µs)
Battery DIP switch setting	Position 1,1,1,1,0,0
Inverter battery type setting	Select Lithium Battery via inverter menu: Battery Type and Communications → Bat Type: Lithium → Bat Com Type: CAN
Special inverter settings required	None
EMS software version	RN_Xcellent_EMS_Private_Firmware_5016_1.2_V3.015
EMS hardware version	V1.002
BMS software version	RN_BMS_48200_202_firmware_2.1_V1.022
BMS hardware version	V2.001

Disclaimer: The information provided herein is correct to the best of NeoVolta's knowledge, is presented in good faith and believed to be correct at the time of printing. No liability for any errors, facts or opinions is accepted. In no event will NeoVolta be responsible for damages of any nature whatsoever resulting from the use of or reliance upon information from this specification sheet or the products to which the information refers. All weights and measures shown are best approximations.

Protection Coordination Requirements

CAN Frame	BMS Fault Condition	Required Inverter Response	Verified
0x359	Cell undervoltage protection	Battery powers off; inverter shuts down	PASS
0x359	Discharge high-temperature protection (grid-tied)	Displays A03-Bat Disconnect + A23-Bat Over Temp	PASS
0x359	Discharge high-temperature protection (off-grid)	Inverter shuts down	PASS
0x359	Discharge low-temperature protection (grid-tied)	Displays A03-Bat Disconnected + A25-Under Temp	PASS
0x359	Discharge low-temperature protection (off-grid)	Inverter shuts down	PASS
0x359	Discharge overcurrent protection (grid-tied)	Displays A04-Bat Under Volt	PASS
0x359	Discharge overcurrent protection (off-grid)	Inverter shuts down	PASS
0x359	Charging high-temperature protection	Displays A24-Bat Over Temp	PASS
0x359	Charging low-temperature protection	Displays A25-Bat Under Temp	PASS
—	BMS communication loss (grid-tied charging)	Stop within 18 s; report A28-BMS Comm Fail; resume within 125 s after restoration	PASS
—	BMS communication loss (off-grid discharging)	Stop within 20 s; resume within 60 s after restoration	PASS

The full Neovolta_NVPlus-16 + Neovolta_NV16KAC Inverter Compatibility Test FM-RD-DQA-014-017 can be requested by NeoVolta Inc.

Disclaimer: The information provided herein is correct to the best of NeoVolta's knowledge, is presented in good faith and believed to be correct at the time of printing. No liability for any errors, facts or opinions is accepted. In no event will NeoVolta be responsible for damages of any nature whatsoever resulting from the use of or reliance upon information from this specification sheet or the products to which the information refers. All weights and measures shown are best approximations.

II. Installation Steps

STEP 1: Installing the NVPlus-16 Battery

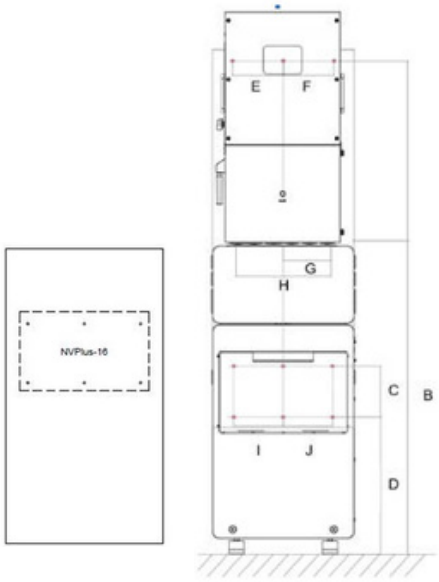

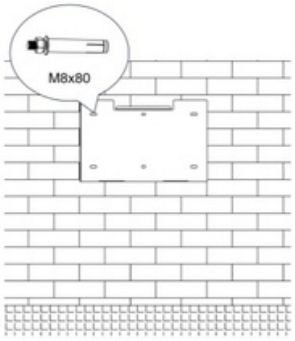

C = 8.27 in (210.00mm)

D = 22.21 in (564.10mm)

G = 7.42 in (188.50mm)

H = 14.8 in (376.00mm)

I = j = 7.68 in (195.00mm)

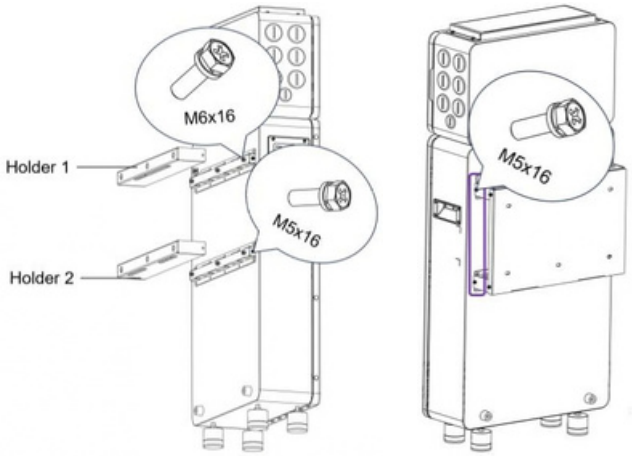

1. Prepare the Installation

- Ensure the following conditions before installation:
- Choose a suitable location: Ensure good ventilation and avoid direct sunlight or high-temperature environments.
- Pre-drill the holes: The positioning cardboard is used to assist installation, and perform precise measurements according to the dimension drawing.
- Secure the mounting panel and install leveling feet before battery installation.

2. Installation Method

- Wall-mounted installation
- Floor installation

Note: The leveling feet are not required for wall-mounted installation.

Disclaimer: The information provided herein is correct to the best of NeoVolta's knowledge, is presented in good faith and believed to be correct at the time of printing. No liability for any errors, facts or opinions is accepted. In no event will NeoVolta be responsible for damages of any nature whatsoever resulting from the use of or reliance upon information from this specification sheet or the products to which the information refers. All weights and measures shown are best approximations.

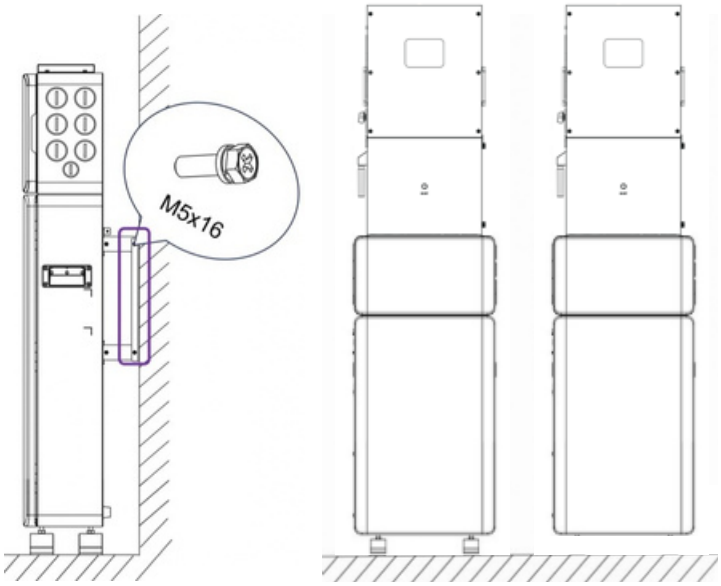

3. Battery Installation

Attach holder 1 and holder 2.

Note: When installing the holder, only the inner screws need to be mounted.

Mounting panel: Install the battery to the mounting panel and secure the external screws.

4. Junction Box

Remove the junction box cover to access inverter connection.

5. Inverter Installation

Mount the inverter directly to the pre-drilled holes to ensure a secure installation.

6. Check

- If any mounting hole misalignment exists, by adjusting the leveling feet to complete the accurate installation. ***Note:*** The leveling feet can support the battery and be adjusted upward by 0.2 inch (5mm).
- **Check and tighten all screws** to ensure a stable and secure installation.

STEP 2: Connect with the NV16KAC Inverter (Single Stack)

Positive power cable | Communication cable | Ground cable | Negative power cable

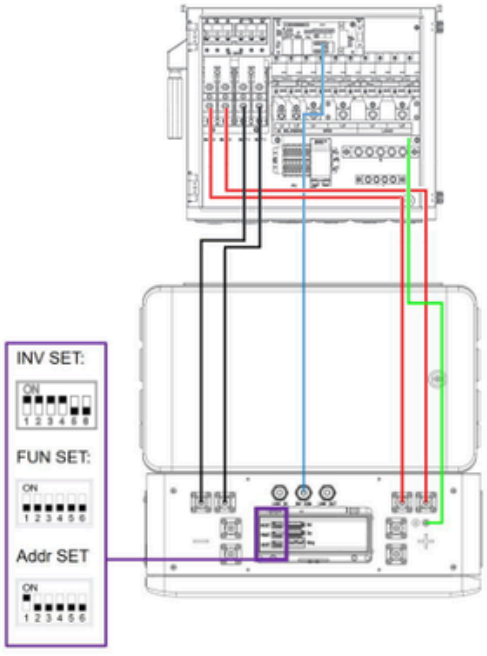

1. Power Cable Connection

- **Ensure the NV16KAC inverter and battery breaker are OFF** before making any connections.
- **Positive (+) terminal & Negative (-) terminal:** Terminal type: **Terminal type:** 2/0 AWG -> Supplied cable: 1 AWG (battery-to-inverter only). Supplied cables are 1 AWG (B+ 32.5 in, B- 22.0 in).
- **Ensure all terminals are securely tightened and properly insulated to prevent short circuits.**

2. Communication Cable Connection & DIP Switch Setting

- **Use RJ45 communication cables** to connect the battery's **INV COM port** to the NVPlus-16 inverter's
- Battery CANBus (BMS) port. Verify communication status on the **NVPlus-16s LCD screen** after powering on the system.

Disclaimer: The information provided herein is correct to the best of NeoVolta's knowledge, is presented in good faith and believed to be correct at the time of printing. No liability for any errors, facts or opinions is accepted. In no event will NeoVolta be responsible for damages of any nature whatsoever resulting from the use of or reliance upon information from this specification sheet or the products to which the information refers. All weights and measures shown are best approximations.

Two batteries in parallel

Power Cable Connection

Please note that the parallel needs to connect the LINK OUT of the #1 to the LINK IN of the #2.

Note: Each additional battery requires four battery-to-battery power cables, made on site by the installer from UL-listed 1 AWG battery cable suitable for the application and the 8 Amphenol SurLok Plus connectors in the kit (orange = positive, black = negative). Cable length is determined by the installer for the site layout. Do not use the supplied B+ (32.5 in) and B- (22.0 in) cables between batteries; they are for battery-to-inverter only. Keep at least 6 in (152.4 mm) between batteries. See NVPlus-16 Installation Manual Section 3.4.4

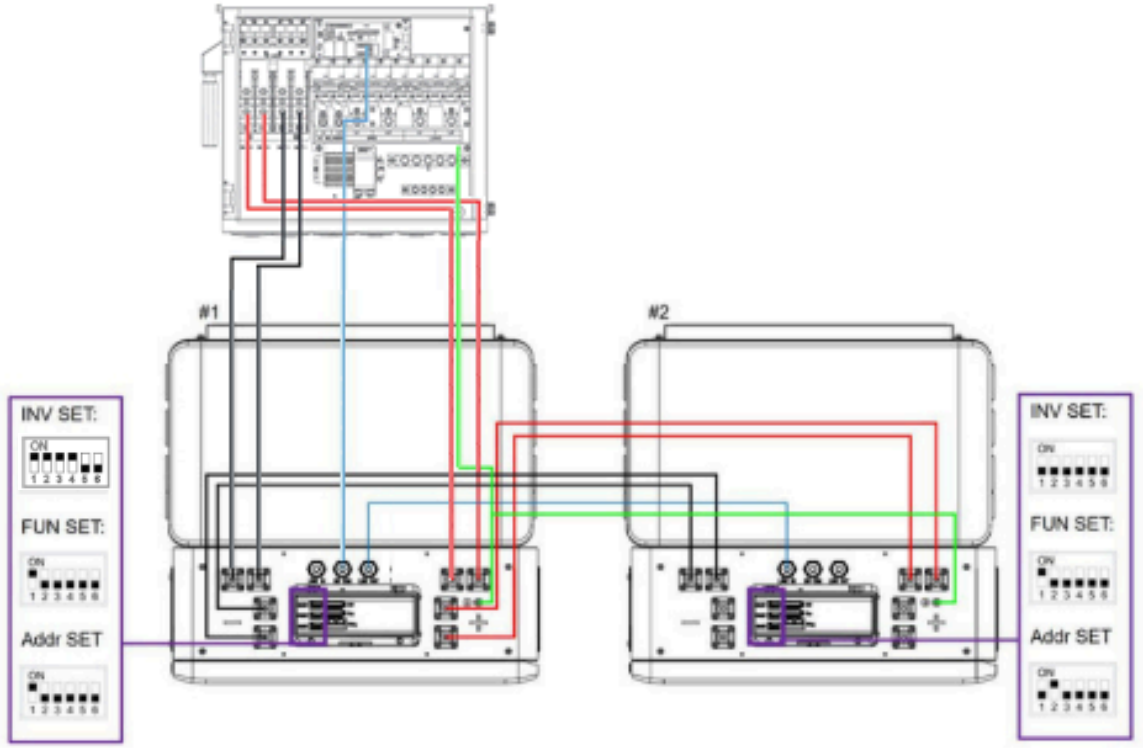

Disclaimer: The information provided herein is correct to the best of NeoVolta's knowledge, is presented in good faith and believed to be correct at the time of printing. No liability for any errors, facts or opinions is accepted. In no event will NeoVolta be responsible for damages of any nature whatsoever resulting from the use of or reliance upon information from this specification sheet or the products to which the information refers. All weights and measures shown are best approximations.

Multiple batteries in parallel

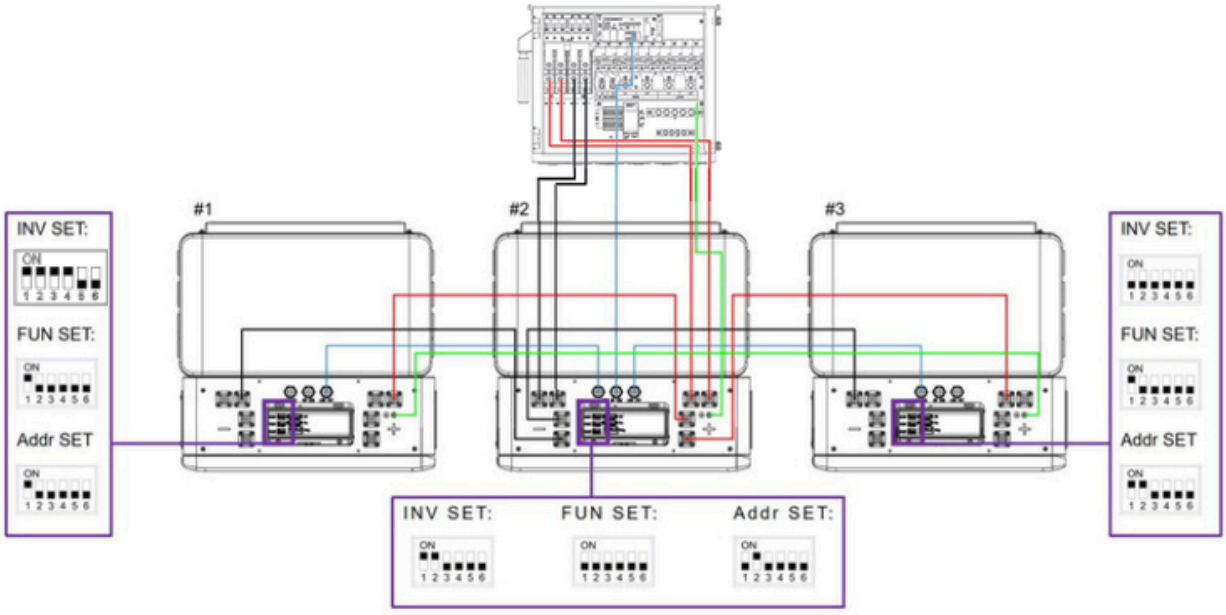

1. Dial code

- **Address:** The address dial switch is sequentially increased.
- **Inverter:** Set the inverter dial switch according to the actual usage.
- **Function:** Set the first battery and the last battery of the system's function dial code as code 1 and set function dial code of the rest of batteries as code 0.

2. Parallel Cable Connection

- Please note that the parallel needs to connect LINK OUT of the #1 to LINK IN of the #2, and the connect LINK OUT of the #2 to LINK In of the #3.
- Battery-to-battery power cables are installer-made (4 per additional battery). Keep at least 6 in (152.4 mm) between batteries. See NVPlus-16 Installation Manual Section 3.4.4

Disclaimer: The information provided herein is correct to the best of NeoVolta's knowledge, is presented in good faith and believed to be correct at the time of printing. No liability for any errors, facts or opinions is accepted. In no event will NeoVolta be responsible for damages of any nature whatsoever resulting from the use of or reliance upon information from this specification sheet or the products to which the information refers. All weights and measures shown are best approximations.

STEP 3: System Power-Up & Configuration

1. Close the Battery DC switch inside the NV16KAC inverter. (On position)

*Before applying battery power to inverter verify battery dip switch is set to position: 1.1.1.1.0.0 (NeoVolta mode)

(This is the INV.SET dip switches on top of the battery)



2. Press the power button on the NVPLUS-16 main control module.

*This is the silver button on the left side of the battery.
*Allow approximately 30 seconds for the battery to boot.

***Verify:**
Battery LED'S illuminate
No battery fault
Battery contactor close
Battery remains powered

- If a fault happens, stop and correct the fault and start again.

3. Press the power button on the front panel of the NV16KAC inverter.

This allows power to the inverter.

- If an external Emergency Stop (RSD) is installed.
- Verify it is in the RUN or OFF position.

The unit display screen will illuminate.

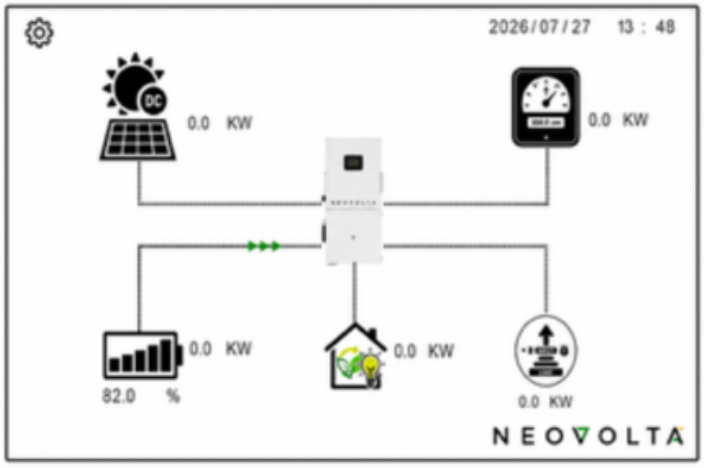

Disclaimer: The information provided herein is correct to the best of NeoVolta's knowledge, is presented in good faith and believed to be correct at the time of printing. No liability for any errors, facts or opinions is accepted. In no event will NeoVolta be responsible for damages of any nature whatsoever resulting from the use of or reliance upon information from this specification sheet or the products to which the information refers. All weights and measures shown are best approximations.

Open the battery information screen by pressing the battery icon.

Verify:
Battery Voltage and State of charge (SOC).

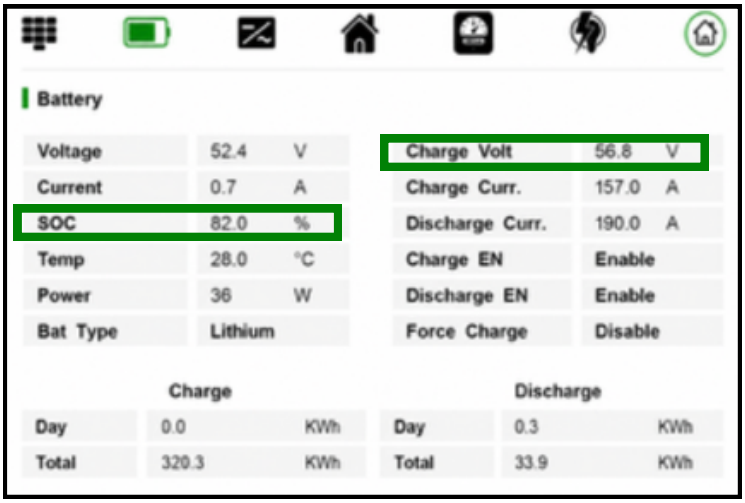

4. Apply Grid Power

Turn on the Grid breaker inside of the inverter.
*Ensure both Grid L1 and L2 breakers are ON.

Open the Grid information screen by pressing the Grid icon on the main screen.



***Verify:**
Grid Voltage detected
Grid Frequency normal
No Grid Fault

III. Conclusion

Following this quick guide ensures proper installation of the NVPlus-16 battery and NV16KAC Hybrid inverter for **efficient and stable system operation**. For further technical support, contact the official support team.

For support scan here

Disclaimer: The information provided herein is correct to the best of NeoVolta's knowledge, is presented in good faith and believed to be correct at the time of printing. No liability for any errors, facts or opinions is accepted. In no event will NeoVolta be responsible for damages of any nature whatsoever resulting from the use of or reliance upon information from this specification sheet or the products to which the information refers. All weights and measures shown are best approximations.